THIS DRAWING IS UNPUBLISHED. RELEASED FOR PUBLICATION -,- .
© COPYRIGHT - By - ALL RIGHTS RESERVED.

LOC	DIST
GP	00

REVISIONS

P	LTR	DESCRIPTION	DATE	DWN	APVD
	L3	REVISED PER ECO-11-004835	11MAR11	RK	HMR

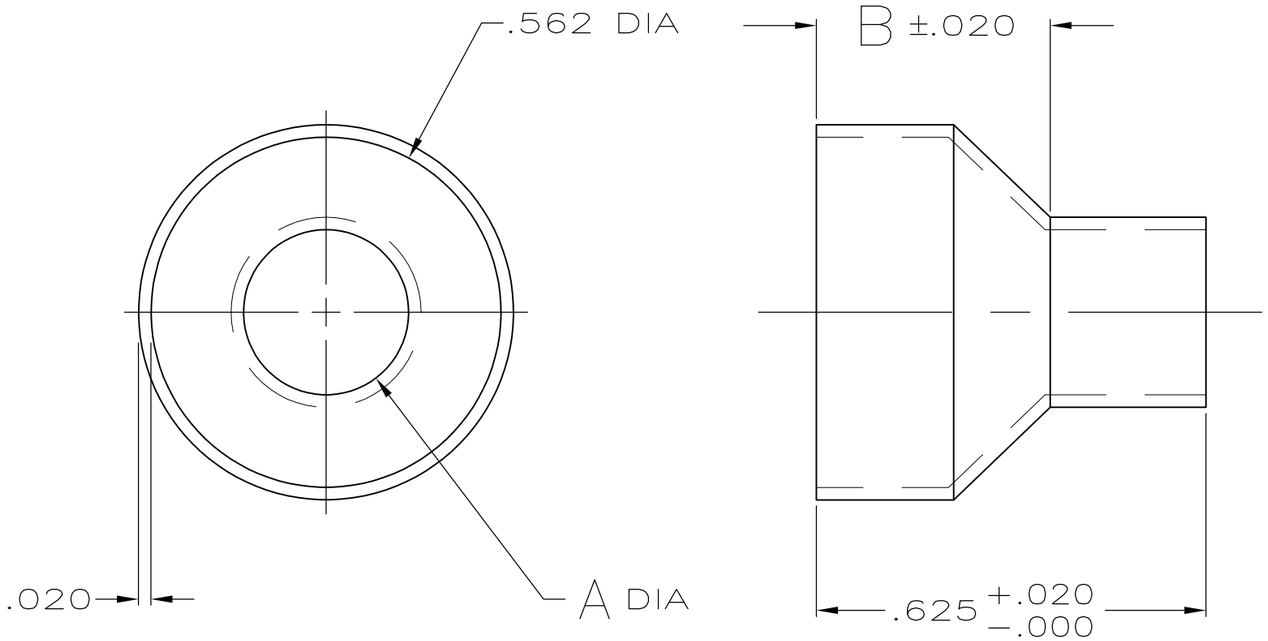

STYLE I (STEPPED)

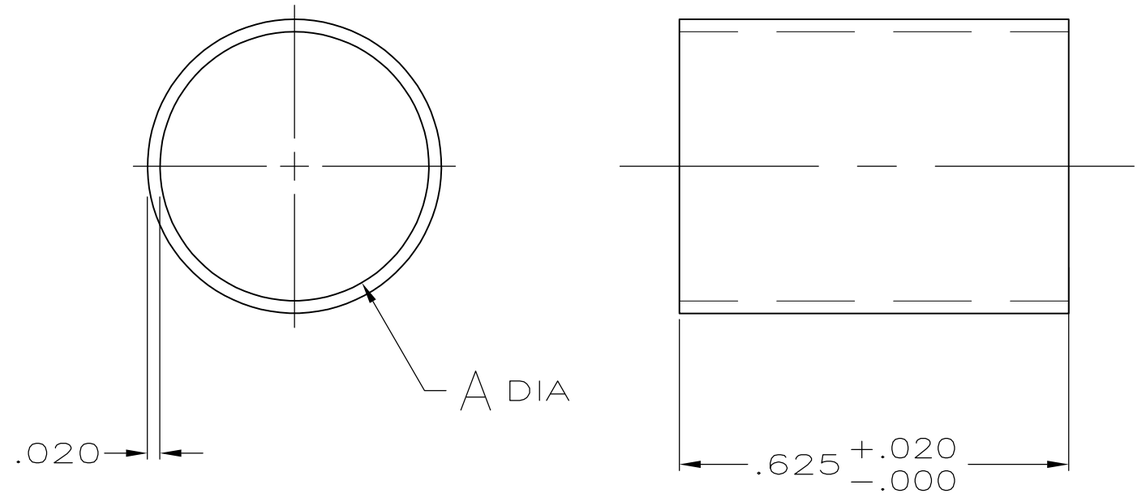

STYLE II (STRAIGHT)

	FINISH	STYLE	INSULATION RANGE DIA	B	A	PART NUMBER
	2	I	.422-.490	.375	.490	3-747580-1
	2	I	.230-.265	.375	.265	2-747580-4
	2	I	.338-.385	.375	.385	2-747580-3
	2	I I	.480-.562	-	.562	2-747580-2
	2	I	.375-.432	.375	.432	2-747580-1
OBSOLETE	1	I	.230-.265	.375	.265	1-747580-0
OBSOLETE	1	I	.338-.385	.375	.385	747580-8
OBSOLETE	1	I I	.480-.562	-	.562	747580-6
OBSOLETE	1	I	.422-.490	.375	.490	747580-5
OBSOLETE	1	I	.375-.432	.375	.432	747580-4

1 .000100 MIN BRIGHT TIN-LEAD OVER .000100 MIN COPPER.
2 .000100 MIN BRIGHT TIN OVER .000100 MIN COPPER.

THIS DRAWING IS A CONTROLLED DOCUMENT.

DIMENSIONS: INCHES

TOLERANCES UNLESS OTHERWISE SPECIFIED:
0 PLC ± -
1 PLC ± -
2 PLC ± -
3 PLC ± .005
4 PLC ± -
ANGLES ± -

MATERIAL: STEEL, ANNEALED

FINISH: SEE TABLE

DWN B. MCMASTER 21MAY04
CHK J. GERACE 21MAY04
APVD M. WALMSLEY 21MAY04
PRODUCT SPEC —
APPLICATION SPEC —
WEIGHT —

TE Connectivity

NAME: OUTER FERRULE, SIZE 4 AND 5, AMPLIMITE SHIELDING HARDWARE

SIZE	CAGE CODE	DRAWING NO	RESTRICTED TO
A3	00779	C-747580	—

CUSTOMER DRAWING

SCALE	SHEET	REV
4:1	1 OF 1	L3