THIS DRAWING IS UNPUBLISHED RELEASED FOR PUBLICATION 2014
© COPYRIGHT 2014 BY TE CONNECTIVITY ALL RIGHTS RESERVED.

LOC	DIST
-	-

REVISIONS

P	LTR	DESCRIPTION	DATE	DWN	APVD
	NC	NEW RELEASE PER E.O. A1414	16MAY1984	-	MM
	A	REVISED/REDRAWN PER E.O. P21334	02APR2012	-	RDR
	A1	REVISED PER ECO-15-001798	19AUG2014	PV	DM

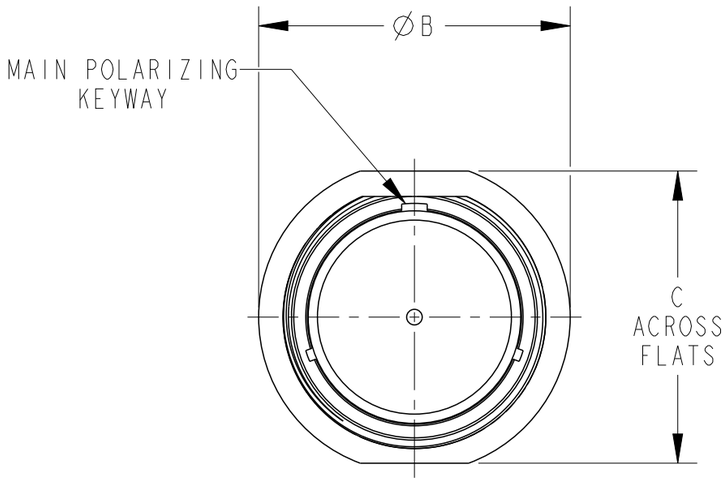

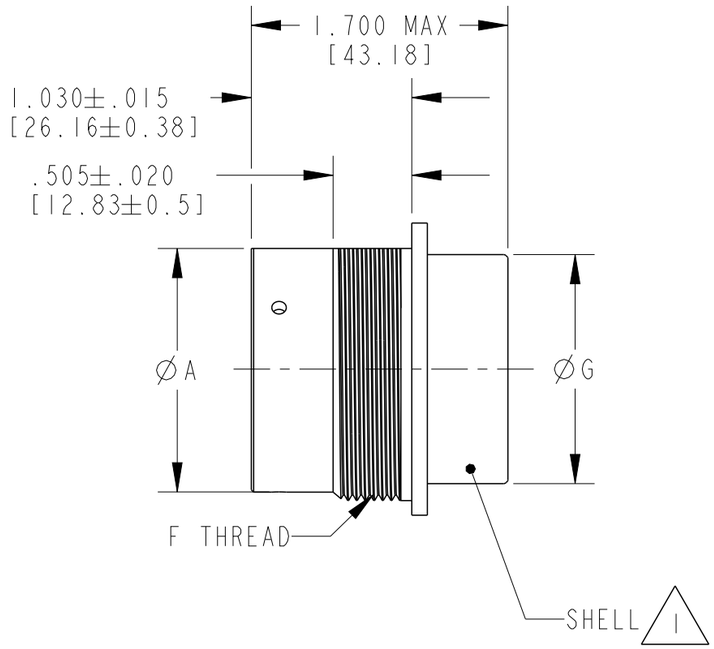

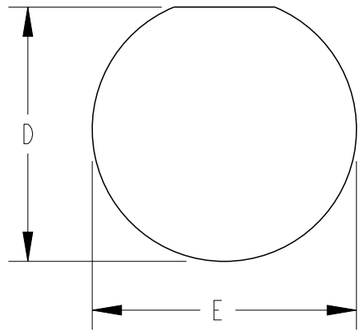

RECOMMENDED PANEL MOUNTING HOLE

SHELL SIZE XX	A	B ±.010 [±.254]	C MAX.	D +.010/-.000 [+0.25/-.000]	E ±.005 [±0.12]	F THREAD REF	G
18	1.329 [33.75]	1.750 [44.45]	1.625 [41.27]	1.442 [36.62]	1.507 [38.27]	1.500 - 18 UNEF	1.220 [30.98]
24	1.579 [40.10]	2.000 [50.8]	1.875 [47.62]	1.632 [41.45]	1.696 [43.07]	1.6875 - 18 UNEF	1.470 [37.33]

2. RECOMMENDED PANEL THICKNESS .062[1.57] MIN. TO .1875[4.76] MAX.

1. MATERIAL:
   SHELL : ALUMINUM.

THIS DRAWING IS A CONTROLLED DOCUMENT.

DIMENSIONS: INCHES[mm]

TOLERANCES UNLESS OTHERWISE SPECIFIED:
0 PLC ±-
1 PLC ±-
2 PLC ±-
3 PLC ±.010 [±.254]
4 PLC ±-
ANGLES ±0° 30' 0"

MATERIAL SEE NOTE
FINISH -

DWN 30OCT2014 VIJETH BHARADWAJ
CHK 31OCT2014 I.GRANTCHAROVA
APVD 31OCT2014 D. MEYER
PRODUCT SPEC -
APPLICATION SPEC -
WEIGHT -

TE Connectivity

NAME COVER, PROTECTIVE BAYONET COUPLING (TO MATE WITH PLUG)

SIZE	CAGE CODE	DRAWING NO	RESTRICTED TO
A3	-	C-HDC34-XX-1E	-

Customer Drawing
SCALE 1:1 SHEET 1 OF 1 REV A1