THIS DRAWING IS UNPUBLISHED. RELEASED FOR PUBLICATION 20
© COPYRIGHT 20 BY - ALL RIGHTS RESERVED.

REVISIONS

P	LTR	DESCRIPTION	DATE	DWN	APVD
	A	INITIAL	08JUN2015	DW	CW

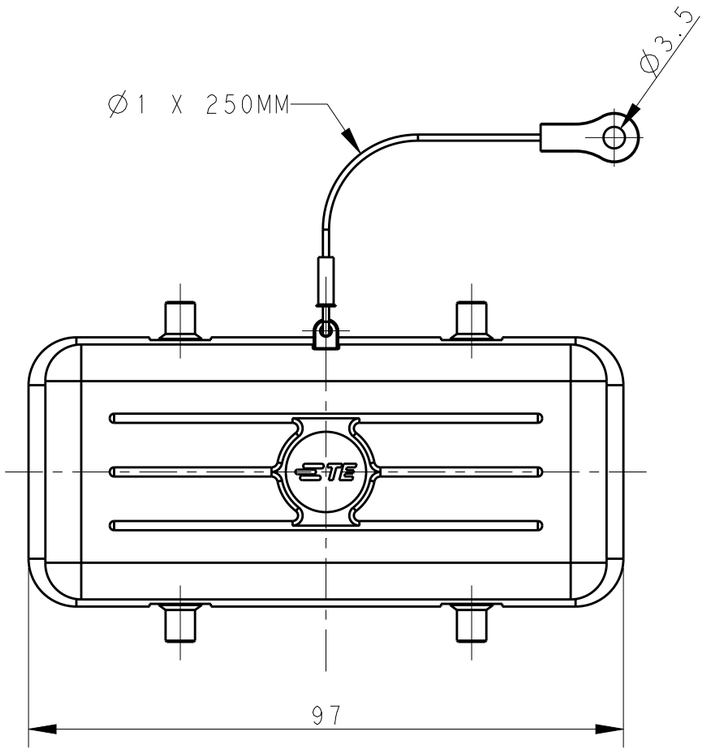

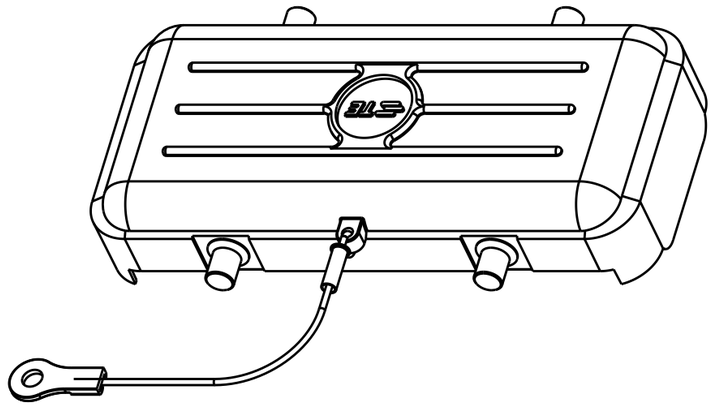

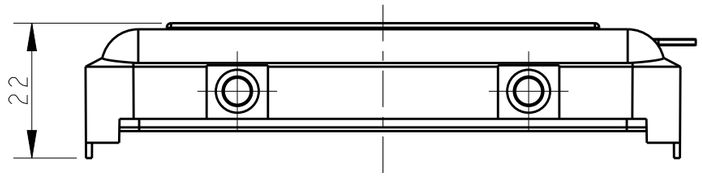

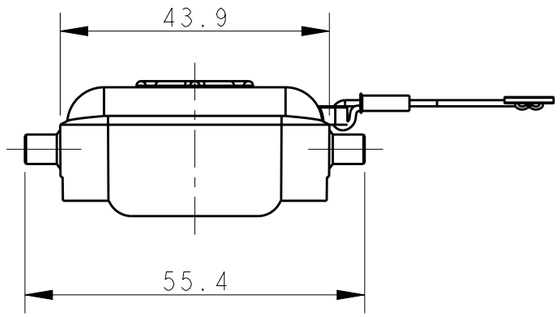

NOTES:
1. TECHNICAL CHARACTERISTICS:
   COVER MATERIAL: PC
   OPERATION TEMPERATURE: -40-+125°C

注释：
1. 技术参数：
   保护盖材料： PC
   工作温度： -40-+125°C

THIS DRAWING IS A CONTROLLED DOCUMENT.

DIMENSIONS: mm

TOLERANCES UNLESS OTHERWISE SPECIFIED:
0 PLC ±-
1 PLC ±-
2 PLC ±-
3 PLC ±-
4 PLC ±-
ANGLES - ±

MATERIAL - -
FINISH - -

DWN David Wang 08JUN2015
CHK Chris Wang 08JUN2015
APVD Xiang Xu 08JUN2015
PRODUCT SPEC -
APPLICATION SPEC -
WEIGHT -

TE Connectivity

NAME
HI6B-KDB
HI6B HOUSING PLASTIC PROTECTION COVER

SIZE	CAGE CODE	DRAWING NO	RESTRICTED TO
A3	00779	C-T1010162100000	-

Customer Drawing | SCALE 1:1 | SHEET 1 OF 1 | REV A

1470-19 (3/13)