MATERIAL NUMBER	ALTERNATE NUMBER	STUD SIZE	"S"	"W" MAX	"C" MIN	"L" MAX	PACKAGING
190580061	B-830-10HDX	10	.198 (5.02)	.760 (19.30)	.316 (8.06)	1.248 (31.70)	LOOSE PIECE
190580069	B-830-14HDX	1/4	.265 (6.73)	.760 (19.30)	.316 (8.06)	1.248 (31.70)	
190580078	B-830-56HDX	5/16	.328 (8.33)	.760 (19.30)	.316 (8.06)	1.248 (31.70)	
190580071	B-830-38HDX	3/8	.390 (9.91)	.760 (19.30)	.316 (8.06)	1.248 (31.70)	
190580087	B-836-04HDX	4	.515 (13.08)	.292 (7.42)	.423 (10.74)	1.077 (27.36)	
190580091	B-836-06HDX	6	.123 (3.12)	.292 (7.42)	.423 (10.74)	1.077 (27.36)	
190580095	B-836-08HDX	8	.146 (3.70)	.292 (7.42)	.423 (10.74)	1.077 (27.36)	
190580062	B-830-10HDXT	10	.198 (5.02)	.760 (19.30)	.316 (8.06)	1.248 (31.70)	TAPE MOUNTED
190580070	B-830-14HDXT	1/4	.265 (6.73)	.760 (19.30)	.316 (8.06)	1.248 (31.70)	
190580079	B-830-56HDXT	5/16	.328 (8.33)	.760 (19.30)	.316 (8.06)	1.248 (31.70)	
190580088	B-836-04HDXT	4	.515 (13.08)	.292 (7.42)	.423 (10.74)	1.077 (27.36)	
190580092	B-836-06HDXT	6	.123 (3.12)	.292 (7.42)	.423 (10.74)	1.077 (27.36)	
190580096	B-836-08HDXT	8	.146 (3.70)	.292 (7.42)	.423 (10.74)	1.077 (27.36)	

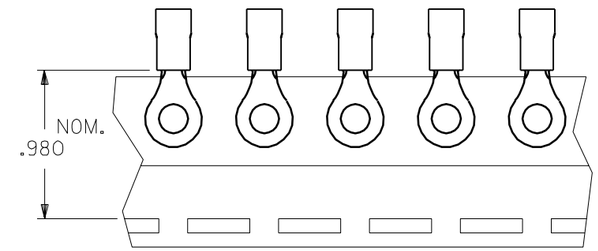

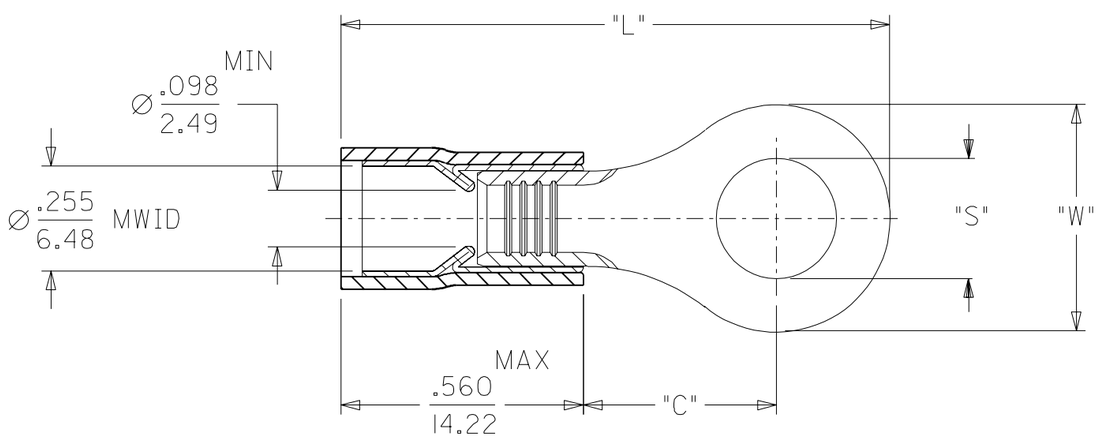

NOTES:
1. MATERIAL: COPPER
   PLATING: ELECTROPLATE TIN
2. FERRULE: TIN-PLATED BRASS
3. INSULATION: BLUE NYLON
4. MWID=MAXIMUM WIRE INSULATION DIA.
5. ALL DIMENSIONS IN INCHES/(MM).

CUSTOMER DRAWING

LTR.	REVISIONS
A	NEW CUST. DWG. ETC2001-0196 2000/11/17 EDB

DIMENSIONS SHOWN (METRIC) INCH

UNLESS OTHERWISE SPECIFIED TOLERANCES: ANGULAR ± 1/2°

	INCH	METRIC
3 PLACE	± .005	± ---
2 PLACE	± .01	± 0.13
1 PLACE	± ---	± 0.25

DRAFT WHERE APPLICABLE MUST REMAIN WITHIN DIMENSIONS

DRWG. BY EDB | CHK'D. BY RWD
APP'D. BY RWD | SCALE NONE

REVISE ONLY ON CAD SYSTEM

TITLE
AVIKRIMP EXPANDED
RING TONGUE TERMINAL
HEAVY DUTY 16-14 AWG

molex ETC INC.
PINELLAS PARK, FLA. 33781 U.S.A.

SHEET NO. 1 OF 1 | DATE 00/09/29

PART NO. SEE TABLE | DRWG. NO. SD-19058-003

FILE NAME SD19058003 DGN

THIS DRAWING CONTAINS INFORMATION THAT IS PROPRIETARY TO MOLEX-ETC INC. AND SHOULD NOT BE USED WITHOUT WRITTEN PERMISSION.

DIV. ET | SIZE B