| REVISIONS | | | | | |
|---|---|---|---|---|---|
| REV | ECO | DESCRIPTION | DATE | BY | APPR |
| A1 | - | FIRST RELEASE | Sep.07,2015 | Drack | Tommy |

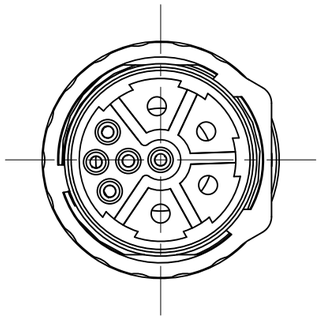

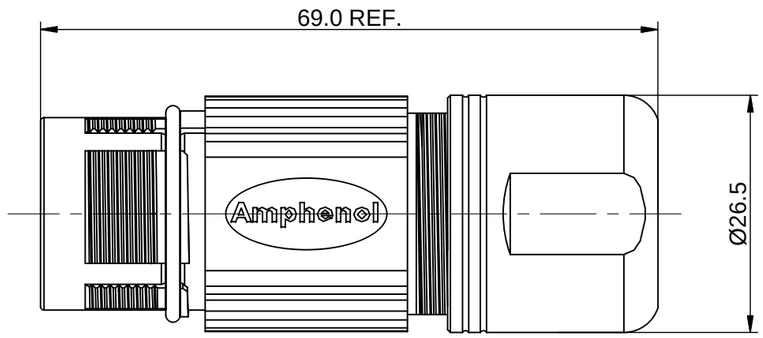


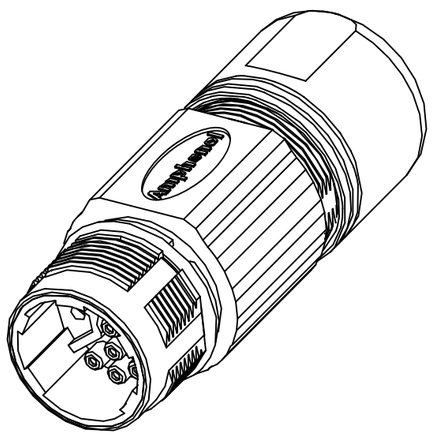

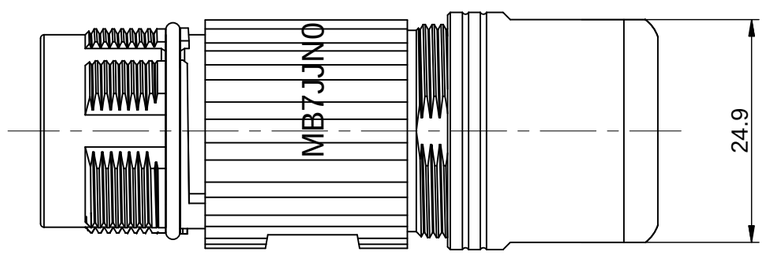


NOTES: UNLESS OTHERWISE SPECIFIED

1. MATERIAL:
   INSULATION INSERT:PA66,UL94 V0
   SEAL: VITON, SILICONE, EPDM
   HOUSING BODY: ZINC DIE CAST, NICKEL PLATED

2. SPECIFICATIONS:
   2.1 CURRENT RATING: SIGNAL: 10 AMPS
   POWER: 30AMPS
   2.2 VOLTAGE RATING: SIGNAL: 250V AC/DC
   POWER: 630V AC/DC
   2.3 OPERATING TEMPERATURE: -20°C TO +130°C
   2.4 DIELECTRIC WITHSTANDING VOLTAGE: LESS THAN 2 MILLIAMPS CURRENT LEAKAGE @ SIGNAL: 2500VOLTS AC.
   POWER: 6000 VOLTS AC.
   2.5 DEGREE OF PROTECTION: IP67 ( MATED CONDITION )
   2.6 DEGREE OF POLLUTION: 3 PER UL840
   2.7 OVERVOLTAGE CATEGORY: III PER UL840
   2.8 MATING CYCLE DURABILITY: >500 CYCLES
   2.9 RoHS COMPLIANT

3. ALL DIMENSIONS ARE FOR REFERENCE USE ONLY.

| Item | Part number | Cable OD Range |
|---|---|---|
| 1 | MB7JJN0900-S1 | 7.5~11.0 mm |
| 2 | MB7JJN0900-S2 | 11.0~14.5 mm |
| 3 | MB7JJN0900-S3 | 14.5~17.0 mm |

| QUANTITY | PART NUMBER | DESCRIPTION | ITEM |
|---|---|---|---|
| | SEE PART NUMBER CHART | | |

MATERIALS LIST

UNLESS OTHERWISE SPECIFIED
1) All dimensions are in metric(mm).
2) Tolerances are as follows:
1 PL DEC ±0.30 | Fractions ±1/64
2 PL DEC ±0.15 | Angles ±1°
3 PL DEC ±0.08
3) Note reference = X

MATERIAL SPECIFICATIONS:

PROCESS SPECIFICATIONS:

NEXT ASS'Y:

| SIGNATURES | | DATE |
|---|---|---|
| DRAWN: | Drack | Sep.07,2015 |
| CHECKED: | | |
| ENGINEER: | | |
| APPROVAL: | | |
| CUSTOMER: | | |

THIS DRAWING IS SUPPLIED FOR INFORMATION ONLY. DESIGN FEATURES, SPECIFICATIONS AND PERFORMANCE DATA SHOWN HEREON ARE THE PROPERTY OF THE AMPHENOL CORPORATION. NO RIGHTS OF REPRODUCTION ARE IMPLIED. ALL DIMENSIONS ARE SUBJECT TO NORMAL MANUFACTURING VARIATIONS.

Amphenol

Sine Systems - www.amphenol-sine.com
44724 Morley Drive
Clinton Township, MI 48036

M23B,RECEPTACLE,STR,9POS(5+4)

| SIZE | TYPE | DWG NO: | REVISION |
|---|---|---|---|
| B | C- | MB7JJN0900-Sx | A1 |

SCALE: NONE SHEET 1 OF 1

TITLE: M23B,RECEPTACLE,STR,9POS(5+4)
DWG NO: MB7JJN0900-Sx
REV: A1
SH: 1
OF: 1