molex
one company › a world of innovation

This document was generated on 07/30/2013

PLEASE CHECK WWW.MOLEX.COM FOR LATEST PART INFORMATION

Part Number: 19002-0048

Status: Active

Description: Avikrimp™ Fully Insulated Quick Disconnect, Female, for 14-16 AWG Wire, Mylar Tape

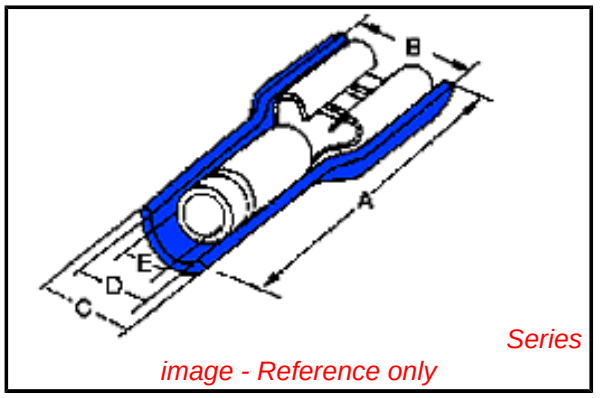

Documents:

Drawing (PDF)
Product Specification PS-19902-011 (PDF)
Product Specification PS-19902-014 (PDF)
Product Specification PS-19902-015 (PDF)
RoHS Certificate of Compliance (PDF)

Agency Certification

TUV	R72090224
UL	E79133

General

Product Family	Quick Disconnects
Series	19002
Crimp Quality Equipment	Yes
Insulated	Fully
Product Name	Avikrimp™
Type	Quick Disconnect
UPC	800753027831

Physical

Barrel Type	Closed
Color - Resin	Blue
Flammability	94V-2
Gender	Female
Glow-Wire Compliant	No
Insulation	Nylon (PA)
Lock to Mating Part	None
Material - Metal	Brass
Material - Plating Mating	Tin
Material - Plating Termination	Tin
Net Weight	0.993/g
Orientation	Straight
Packaging Type	Adhesive Tape on Reel
Polarized to Mating Part	No
Tab Thickness	0.51mm
Tab Width	5.21mm
Temperature Range - Operating	-65°C to +105°C
Wire Insulation Diameter	3.94mm max.
Wire Size AWG	14, 16
Wire Size mm²	1.30 - 2.00

Electrical

Voltage - Maximum	300V

Material Info

Old Part Number	BB-5287T

Reference - Drawing Numbers

Product Specification	PS-19902-011, PS-19902-014, PS-19902-015
Sales Drawing	SD-19002-004

EU RoHS
ELV and RoHS Compliant
REACH SVHC
Contains SVHC: No
Low-Halogen Status
Low-Halogen

China RoHS

Need more information on product environmental compliance?

Email productcompliance@molex.com
For a multiple part number RoHS Certificate of Compliance, click here

Please visit the Contact Us section for any non-product compliance questions.

Search Parts in this Series
19002Series

Application Tooling | **FAQ**

Tooling specifications and manuals are found by selecting the products below. Crimp Height Specifications are then contained in the Application Tooling Specification document.

Global

Description	Product #
Crimp Dies for MTA-100 Tape Applicator used in 3BF Press, MTA-105 Tape Applicator used in TM-2000™ Press, and ATP-301 Air Crimping Press for Mylar Tape Mounted Terminals	0192880130
Mini-Mac™ Applicator	0638850200

This document was generated on 07/30/2013
PLEASE CHECK WWW.MOLEX.COM FOR LATEST PART INFORMATION