SIGN	DATE	DESCRIPTION	APPROVER
1	9/16'08	Voltage rating changed from 150V to 300V	Tony
2	9/16'08	Add "CQC" Safety Approval Logo	Tony
3	9/16'08	Wire strip length changed from 6-7mm to 8.5-10mm	Tony
4	9/16'08	Operating temperature changed (-40°C to +115°C)	Tony
5	4/24`10	Electrical & Structure & PART NO.changed	Runner
6	12/25`10	How to order is changed	Runner
THIS IS CAD DRAWING, DO NOT REVISE MANUALLY!!!			

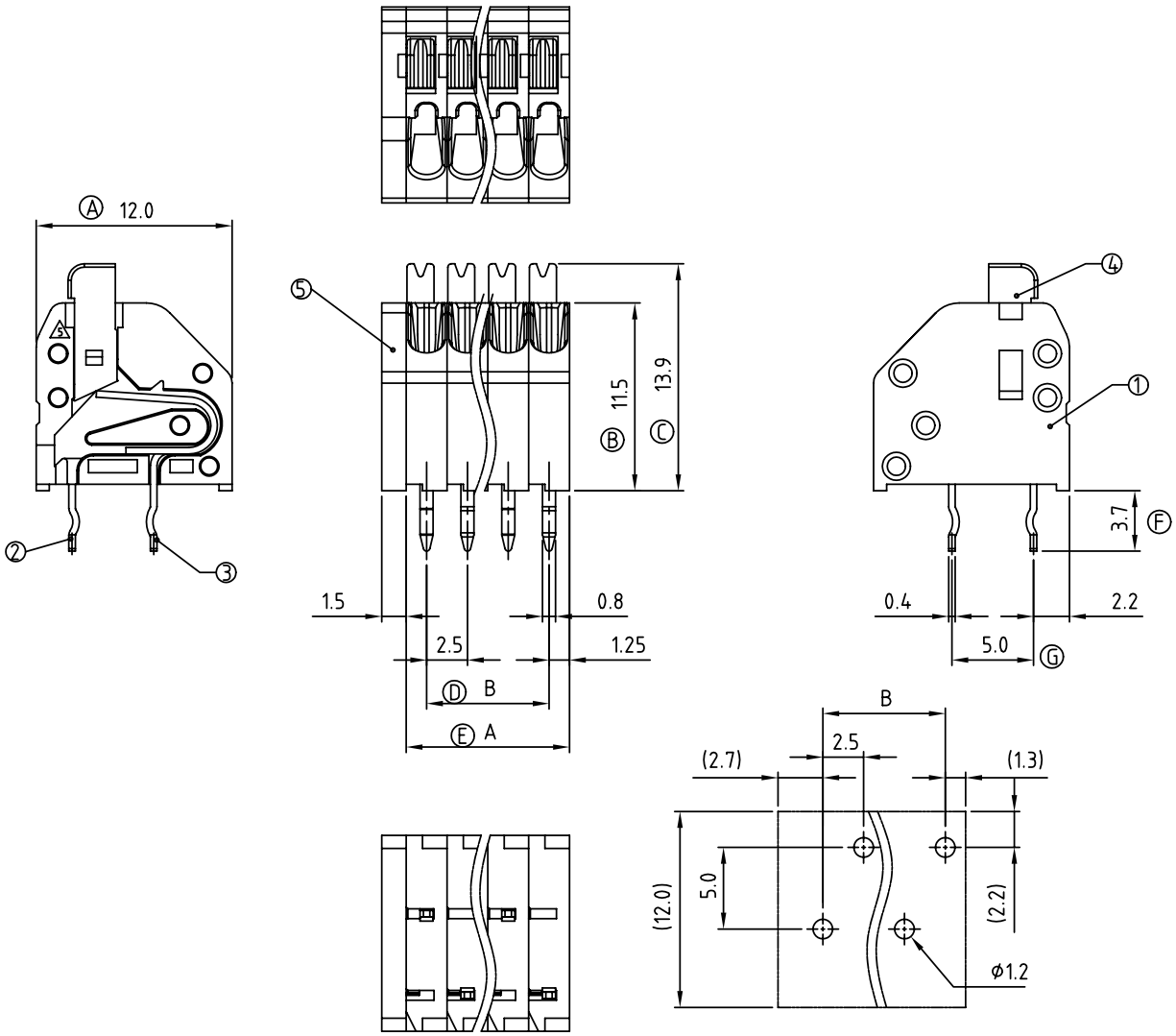

P.C.B Layout

Material

- Item ① Terminal body: Thermoplastic (UL94V-0)
- Item ② Side Contact pin : PhBz Tin plated.
- Item ③ Center contact pin: PhBz.Tin plated.
- Item ④ Terminal lever : Thermoplastic (UL94V-0)
- Item ⑤ Terminal cover : Thermoplastic (UL94V-0)

		cULus	CQC
5	Electrical:		
1	Voltage rating:	300V	300V
	Current rating:	2A	2A
	Wire range:		
	Solid wire(AWG):	20-26	20
	Stranded wire(AWG):	20-26	20
3	Wire strip length:	8.5-10.0mm	
	Withstanding Voltage:	1.6KV	2.5KV
4	Operating temperature:	-40°C to +115°C	
	The soldering temperature:	250°C±5°C/5 Sec.	
2	Safety Approval:		

5 HC xx B 2 x 0 xxxx G 6

No. OF POLES
02: 2 POLES
⋮
24: 24 POLES

COLOR
2: Red
3: Orange
5: Green (RAL 6018/T)
8: Grey (RAL 7004/P)

0000: "@" Logo (Standard)
000A: "ANYTEK" Mark
Any special item by customer requst. please contact sales department.

POLE		2	3	4	5	6	7	8	9	10	11	12
A		5.00	7.50	10.00	12.50	15.00	17.50	20.00	22.50	25.00	27.50	30.00
B		2.50	5.00	7.50	10.00	12.50	15.00	17.50	20.00	22.50	25.00	27.50
Tol.		±0.20					±0.30					
POLE	13	14	15	16	17	18	19	20	21	22	23	24
A	32.50	35.00	37.50	40.00	42.50	45.00	47.50	50.00	52.50	55.00	57.50	60.00
B	30.00	32.50	35.00	37.50	40.00	42.50	45.00	47.50	50.00	52.50	55.00	57.50
Tol.		±0.40					±0.50					

ANYTEK

CUSTOMER COPY

ALL RIGHTS RESERVED. REPRODUCTION OR ISSUE TO THIRD PARTIES IN ANY FORM WHATEVER IS NOT PERMITTED WITHOUT WRITTEN AUTHORITY FROM THE PROPRIETOR. PROPERTY OF ANYTEK TECHNOLOGY CO., LTD

TITLE	HC 2.5mm -High profile Series					
PART NO.	HCxxB2x0xxxxG			DWG NO.	8HC0501	
APPROVED	CHECKED	DESIGNED	DRAWN	CUST NO.		Tolerance
		Runner 2010.12.25	Tony 2008.09.16		UNIT: mm	X. ±0.50
					SCALE: NONE	X.X ±0.30
				SHEET: 01/01	REV.: E	X.XX ±0.10
						X° ±1°