THIS DRAWING IS UNPUBLISHED. RELEASED FOR PUBLICATION 20
© COPYRIGHT 20 BY TYCO ELECTRONICS CORPORATION. ALL RIGHTS RESERVED.

PART NUMBER	REV	TERMINATOR	FEED TYPE	DESCRIPTION
1426573-1	A	LEADMAKER	MECH POST FEED	CUTS CARRIER
1426573-2	A	BENCH	MECH PRE FEED	CUTS CARRIER
1426573-6	A	LEADMAKER	MECH POST FEED	CONTINUOUS CARRIER
7-1426573-1	A	LEADMAKER	MECH POST FEED	-1 AND SPARE PARTS
7-1426573-2	A	BENCH	MECH PRE FEED	-2 AND SPARE PARTS
7-1426573-6	A	LEADMAKER	MECH POST FEED	-6 AND SPARE PARTS
7-1426573-7	A	-	-	SPARE PARTS KIT

SET UP GAGE 458637-3

LOC	DIST
A	66

REVISIONS

P	LTR	DESCRIPTION	DATE	DWN	APVD
	A	SEE ECO-05-014535	24NOV05	LJL	MC

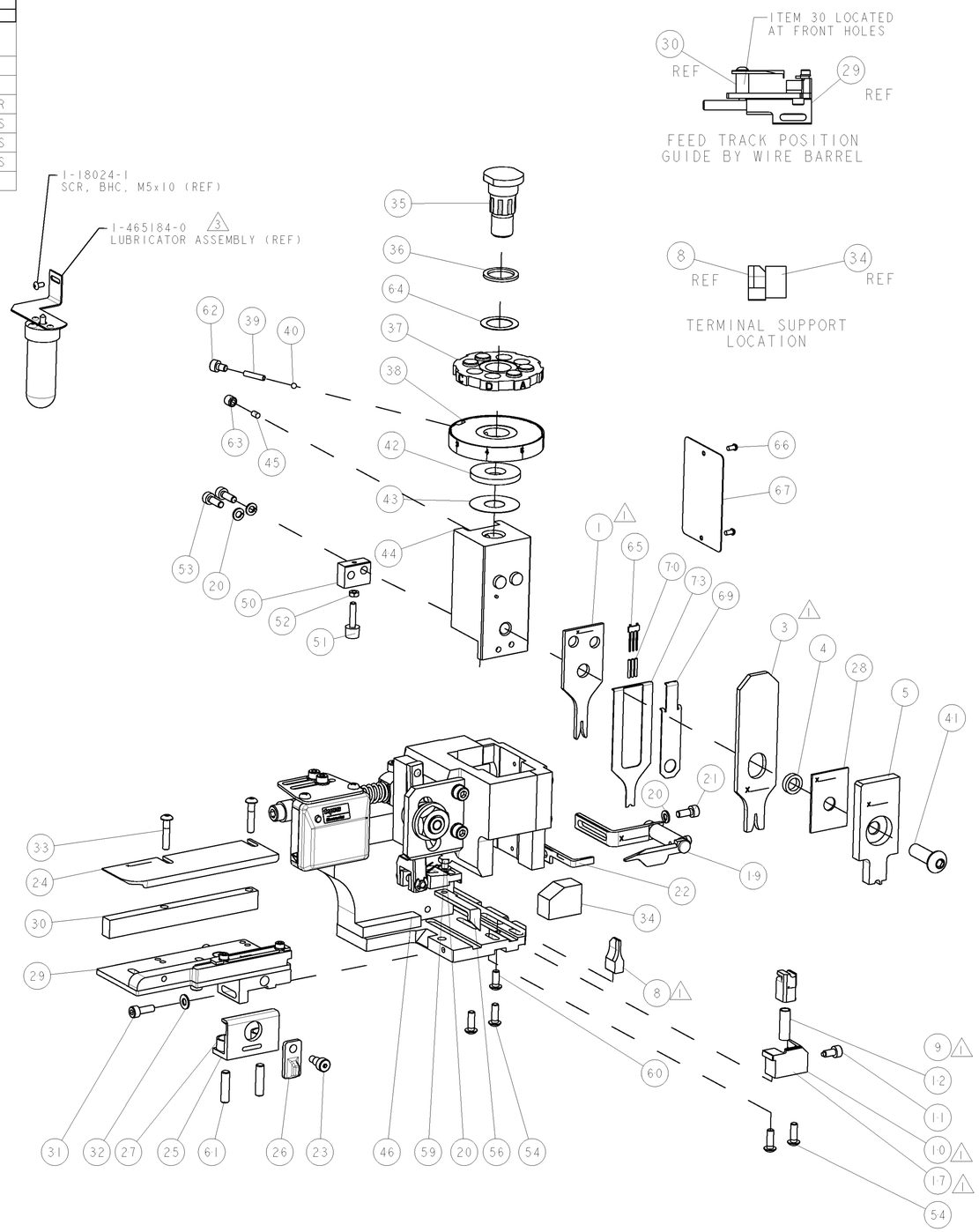

CRIMP DATA YAZAKI TERMINAL YAZAKI CRIMP SPECS			
TERMINAL NAME: A TYPE FEMALE TERMINAL			
CRIMP	SIZE	TYPE	RANGE
WIRE	1.27 [.050 IN]	F	0.30mm²-0.50mm²
INSUL	1.40 [.055 IN]	F	1.10-1.40 [.043-.055 IN]
WIRE STRIP LENGTH 4.00-4.50 [.157-.177 IN]			APPL INSTRUCTIONS 408-8322
TERMINAL APPL SPEC	YAZAKI - 72WT102284-1 -		FEED 8.13 [.320 IN]

TERMINALS APPLIED

TYCO PN	MANUF PN	-	-
1572838-1	7116-1670-02	-	-
-	-	-	-
-	-	-	-
-	-	-	-

WIRE SIZE	CRIMP HEIGHT	PIN PN & LENGTH [IN]
0.50mm²	1.00 ±0.03 [.039 ±.001 IN]	9-354778-7 [.2980]
0.30mm²	0.92 ±0.03 [.036 ±.001 IN]	354779-4 [.3010]
-	-	-
-	-	-
-	-	-
-	-	-
-	-	-
-	-	-
-	-	-
-	-	-
-	-	-
-	-	-

1. RECOMMENDED SPARE PARTS.
2. GREASE RAM, CAM, CAM FOLLOWER AND FEED ROD LIGHTLY.
3. CERTAIN TERMINALS REQUIRE LUBRICATION. REFER TO THE APPLICATOR INSTRUCTION SHEET FOR MORE INFORMATION.
4. LUBRICATE DAILY PER THE APPLICATOR INSTRUCTION SHEET SUPPLIED WITH THE APPLICATOR.

	-77	-76	-72	-71	-6	-2	-1	PART NO	DESCRIPTION	ITEM NO
	-	1	1	1	1	1	1	1490525-3	DEPRESSOR, WIRE	73
	-	-	-	-	-	-	-	-	-	72
	-	1	1	1	1	1	1	1338705-1	DOCUMENTATION PACKAGE	71
	-	3	3	3	3	3	3	2-23147-2	SPRING, COMPRESSION	70
	-	1	1	1	1	1	1	1490524-1	DEPRESSOR, SPACER	69
	-	-	-	-	-	-	-	-	-	68
	-	1	1	1	1	1	1	461264-1	PLATE, IDENTIFICATION	67
	-	2	2	2	2	2	2	21017-2	SCREW, DRIVE	66
	-	1	1	1	1	1	1	1424350-1	HOLDER, PIN	65
	-	1	1	1	1	1	1	986950-1	WASHER, FLAT PRECISION	64
	-	1	1	1	1	1	1	3-18031-0	SCR, SET, CUP POINT M6 X 6.0	63
	-	1	1	1	1	1	1	18023-9	SCR, SKT HD CAP M4 X 6.0	62
	-	2	2	2	2	2	2	2-18032-5	SCR, SET, FLT POINT M5 X 20.0	61
	-	1	1	1	1	1	1	18024-7	SCR, BTN SKT HD CAP (M4 X 10.0)	60
	-	1	1	1	1	1	1	5-18022-2	SCR, HEX HD CAP M4 X 8.0	59
	-	-	-	-	-	-	-	-	-	58
	-	-	-	-	-	-	-	-	-	57
	-	1	1	1	1	1	1	1338685-1	PAWL, FEED	56
	-	-	-	-	-	-	-	-	-	55
	-	4	4	4	4	4	4	18024-8	SCR, BTN SKT HD CAP (M4 X 12.0)	54
	-	2	2	2	2	2	2	1-18023-2	SCR, SKT HD CAP M4 X 12.0	53
	-	1	1	1	1	1	1	18030-1	NUT, HEX, REG M3	52
	-	1	1	1	1	1	1	811242-5	BUMPER, HOLD DOWN	51
	-	1	1	1	1	1	1	690753-2	SPACER, TONKER	50
	-	1	1	1	1	1	1	18024-3	SCR, BTN SKT HD CAP (M3 X 10.0)	49
	-	-	1	-	-	1	-	1338675-1	CAM, UNIVERSAL PRE FEED	48
	-	1	-	1	1	-	1	1338676-1	CAM, UNIVERSAL POST-FEED	47
	-	1	1	1	1	1	1	1320999-3	APPLICATOR SUBASSEMBLY, HDI	46
	-	1	1	1	1	1	1	690191-1	PLUG,NYLON	45
	-	1	1	1	1	1	1	1338660-1	RAM	44
	-	1	1	1	1	1	1	690125-1	SHIM SUB-ASSY	43
	-	1	1	1	1	1	1	690124-4	WASHER, RAM (.135)	42
	-	1	1	1	1	1	1	2-18024-6	SCR, BTN SKT HD CAP (M8 X 25.0)	41
	-	1	1	1	1	1	1	23241-1	BALL, STEEL	40
	-	1	1	1	1	1	1	2-22278-7	SPRING, COMPRESSION	39
	-	1	1	1	1	1	1	1-1320922-2	DISC, ADJUST, INSULATION CRIMP	38
	-	1	1	1	1	1	1	354777-1	WIRE DISC, ASSEMBLY	37
	-	1	1	1	1	1	1	22480-5	SPRING, COMPRESSION	36
	-	1	1	1	1	1	1	690212-1	POST, RAM	35
	-	1	1	1	1	1	1	1320934-3	SUPPORT, TERMINAL	34
	-	2	2	2	2	2	2	1-18024-0	SCR, BTN SKT HD CAP (M4 X 20.0)	33
	-	1	1	1	1	1	1	18027-2	WASHER, FLAT, REG M4	32
	-	1	1	1	1	1	1	1-18023-2	SCR, SKT HD CAP M4 X 12.0	31
	-	1	1	1	1	1	1	1320908-4	SPACER, STRIP GUIDE	30
	-	1	1	1	1	1	1	1633073-1	STRIP GUIDE ASSEMBLY	29
	-	1	1	1	1	1	1	1-455888-0	SPACER, CRIMPER	28
	-	2	2	2	2	2	2	1-22284-0	SPRING, COMPRESSION	27
	-	1	1	1	1	1	1	356835-1	LEVER, DRAG RELEASE	26
	-	1	1	1	1	1	1	240792-1	DRAG, TERMINAL	25
	-	1	1	1	1	1	1	1320928-1	PLATE, STRIP GUIDE	24
	-	1	1	1	1	1	1	980371-4	SCR, SKT HD SHLDR 5.0 DIA X 6.0	23
	-	1	-	1	1	-	1	690472-2	STRIPPER	22
	-	1	1	1	1	1	1	1-18023-1	SCR, SKT HD CAP M4 X 10.0	21
	-	4	4	4	4	4	4	18025-2	WASHER, SPRG LOCK, REG M4	20
	-	-	1	-	-	1	-	1424364-1	STRIPPER/ WIRE STOP ASSY	19
	-	-	-	-	-	-	-	-	-	18
1	-	1	-	-	1	-	-	1338684-1	SHEAR HOLDER, FRONT	17
	-	-	-	-	-	-	-	-	-	16
	-	-	-	-	-	-	-	-	-	15
	-	-	-	-	-	-	-	-	-	14
	-	-	-	-	-	-	-	-	-	13
	-	1	1	1	1	1	1	5-22280-0	SPRING, COMPRESSION	12
	-	1	1	1	1	1	1	356885-4	STOP, SHEAR	11
1	-	-	1	1	-	1	1	1320921-1	SHEAR HOLDER, FRONT, CUT	10
1	-	1	1	1	1	1	1	462006-1	FLOATING SHEAR, FRONT	9
1	1	2	2	2	1	1	1	1633139-5	ANVIL, COMBINATION	8
	-	-	-	-	-	-	-	-	-	7
	-	-	-	-	-	-	-	-	-	6
	-	1	1	1	1	1	1	2-455889-0	DEPRESSOR, SHEAR	5
	-	1	1	1	1	1	1	3-238011-8	BLOCK, CRIMPER SPACER	4
1	1	2	2	2	1	1	1	7-1424909-2	CRIMPER, INSULATION F	3
	-	-	-	-	-	-	-	-	-	2
1	1	2	2	2	1	1	1	5-568176-3	CRIMPER, WIRE	1
	-77	-76	-72	-71	-6	-2	-1	PART NO	DESCRIPTION	ITEM NO

VIEW B ROTATED 180°

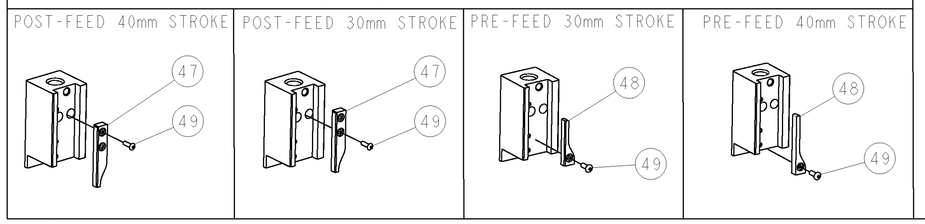

	-77	-76	-72	-71	-6	-2	-1	PART NO	DESCRIPTION	ITEM NO
	-	-	-	-	-	-	-	-	-	84
	-	-	-	-	-	-	-	-	-	83
	-	-	-	-	-	-	-	-	-	82
	-	-	-	-	-	-	-	-	-	81
	-	-	-	-	-	-	-	-	-	80
	-	-	-	-	-	-	-	-	-	79
	-	-	-	-	-	-	-	-	-	78
	-	-	-	-	-	-	-	-	-	77
	-	-	-	-	-	-	-	-	-	76
	-	-	-	-	-	-	-	-	-	75
	-	-	-	-	-	-	-	-	-	74
	-77	-76	-72	-71	-6	-2	-1	PART NO	DESCRIPTION	ITEM NO

THIS DRAWING IS A CONTROLLED DOCUMENT FOR TYCO ELECTRONICS CORPORATION. IT IS SUBJECT TO CHANGE AND THE CONTROLLING ENGINEERING ORGANIZATION SHOULD BE CONTACTED FOR THE LATEST REVISION.

DIMENSIONS: mm [IN]

TOLERANCES UNLESS OTHERWISE SPECIFIED:
0 PLC ±-
1 PLC ±-
2 PLC ±-
3 PLC ±-
4 PLC ±-
ANGLES ±-

MATERIAL - -
FINISH - -

DWN 20OCT2005 D PROUSE
CHK -
APVD 20OCT2005 M CLIFFORD
PRODUCT SPEC -
APPLICATION SPEC - See Table
WEIGHT -

tyco Electronics
Tyco Electronics
Harrisburg, PA 17105-3608

NAME SIDE FEED HDI APPLICATOR - -

SIZE	CAGE CODE	DRAWING NO	RESTRICTED TO
A1	00779	C-1426573	-

CUSTOMER DRAWING SCALE 3:5 SHEET 1 OF 1 REV A

AMP 4805 REV 31MAR2000

Pro/ENGINEER DRAWING