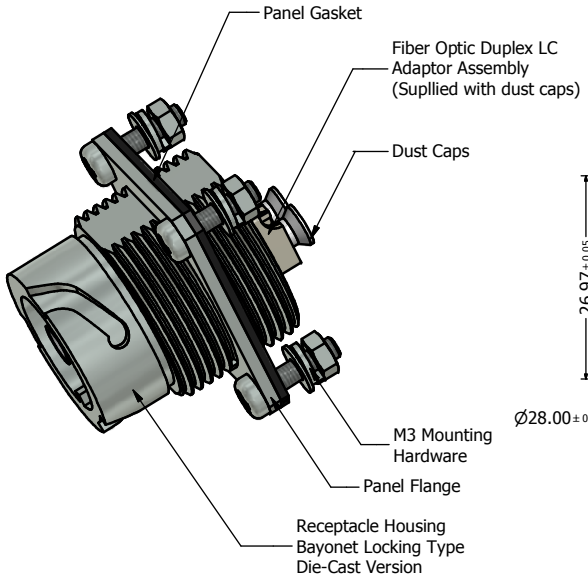

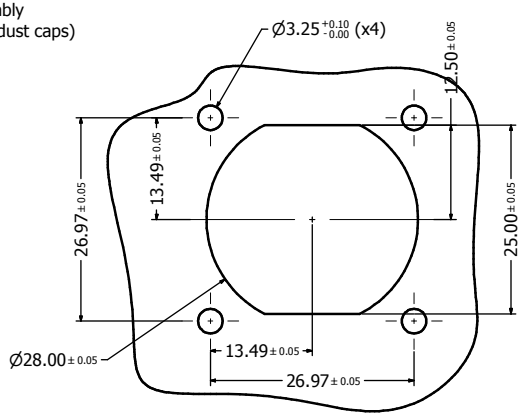

Recommended Double-D Panel Cutout

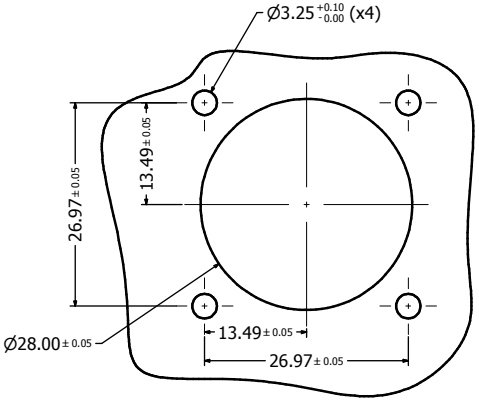

Recommanded Round Panel Cutout

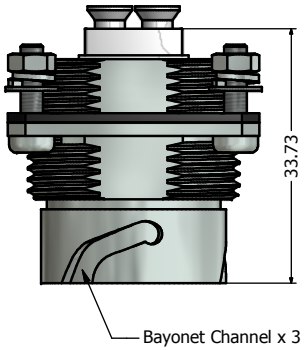

Notes:

1. Material and Finish:
   - Receptacle Housing: Die-Cast, Nickel Plated
   - Panel Gasket: NBR, Color: Black
   - M3 Mounting Hardware: Stainless Steel
     icludes 4 x (screw + nut + flat washer + spring lock washer)
     Duplex LC Adaptor Assembly:
   - Housing: Mod. PPO , UL94 V-0, Color:
     SM Blue/MM Beige/APC SM Green
   - Alignment Sleeves: SM Ceramic/MM Phosphor Bronze
   - Dust Cap: PP, Color: Neutral transparent
   - Operating Temperature: -40˚C to +85˚C
2. Connector can be front or rear mounted to a maximum panel thickness of 3.2mm.
3. IP67 rated when covered or fully mated with the appropriate mating connector
4. Hardware shipped unassembled

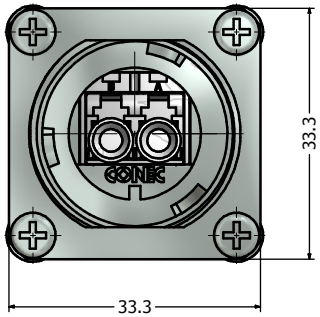

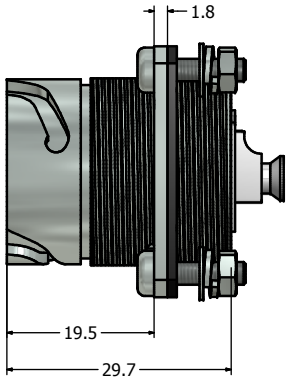

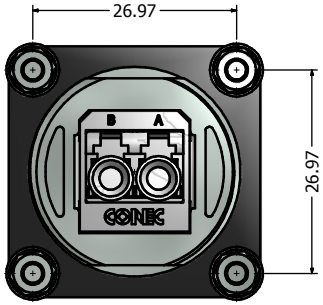

Directive 2002/95/EC RoHS Compliant

Description	Part Number
Single Mode (SM)	17-300670
Multi Mode (MM)	17-300680
APC Single Mode (APC SM)	17-300690

THIS DRAWING MAY NOT BE COPIED OR REPRODUCED IN ANY WAY, NOR MAY IT BE DISCLOSED TO A THIRD PARTY WITHOUT WRITTEN PERMISSION. OWNERSHIP AND COPYRIGHT OF CONEC CORPORATION.

DO NOT ALTER CAD DRAWING BY HAND

Customer:

Name	Title	Approval Date

Rev.	Changes	Date	Name
a	original		

Tolerance
Unless otherwise specified
0 PLC ± 0.30
1 PLC ± 0.20
2 PLC ± 0.10
3 PLC ± 0.05
ANGLES ± 1˚

Autodesk Inventor

	Date	Name
2012		
Draw.	Apr. 17	Vincent Ke
Appd.	Apr. 17	J. Chaudry
Norm		
D-old		

CONEC®

Scale: Dim. in mm

Material: See Notes

Title: IP67 Industrial Duplex LC Receptacle (with Flange) Assembly Kit
Nickel Plated Zinc Die-Cast Version

Drawing No.: 17K1A326

DIN A3

Part No.: SEE PART NUMBER TABLE

Sheet 1/1