THIS DRAWING IS UNPUBLISHED. RELEASED FOR PUBLICATION -,- .
© COPYRIGHT - By - ALL RIGHTS RESERVED.

LOC	DIST
FT	0

REVISIONS

P	LTR	DESCRIPTION	DATE	DWN	APVD
	A	REVISED PER ECO-13-010717	01JUL13	KH	MZ

1 CONTACT CAVITIES IDENTIFIED BY CHARACTERS ON FRONT AND REAR FACES OF CONNECTOR.

2 WILL ACCEPT (3) TYPE XII PIN CONTACTS.

3 HOUSING AND COUPLING RING MATERIAL: NYLON, BLACK. UV RESISTANT

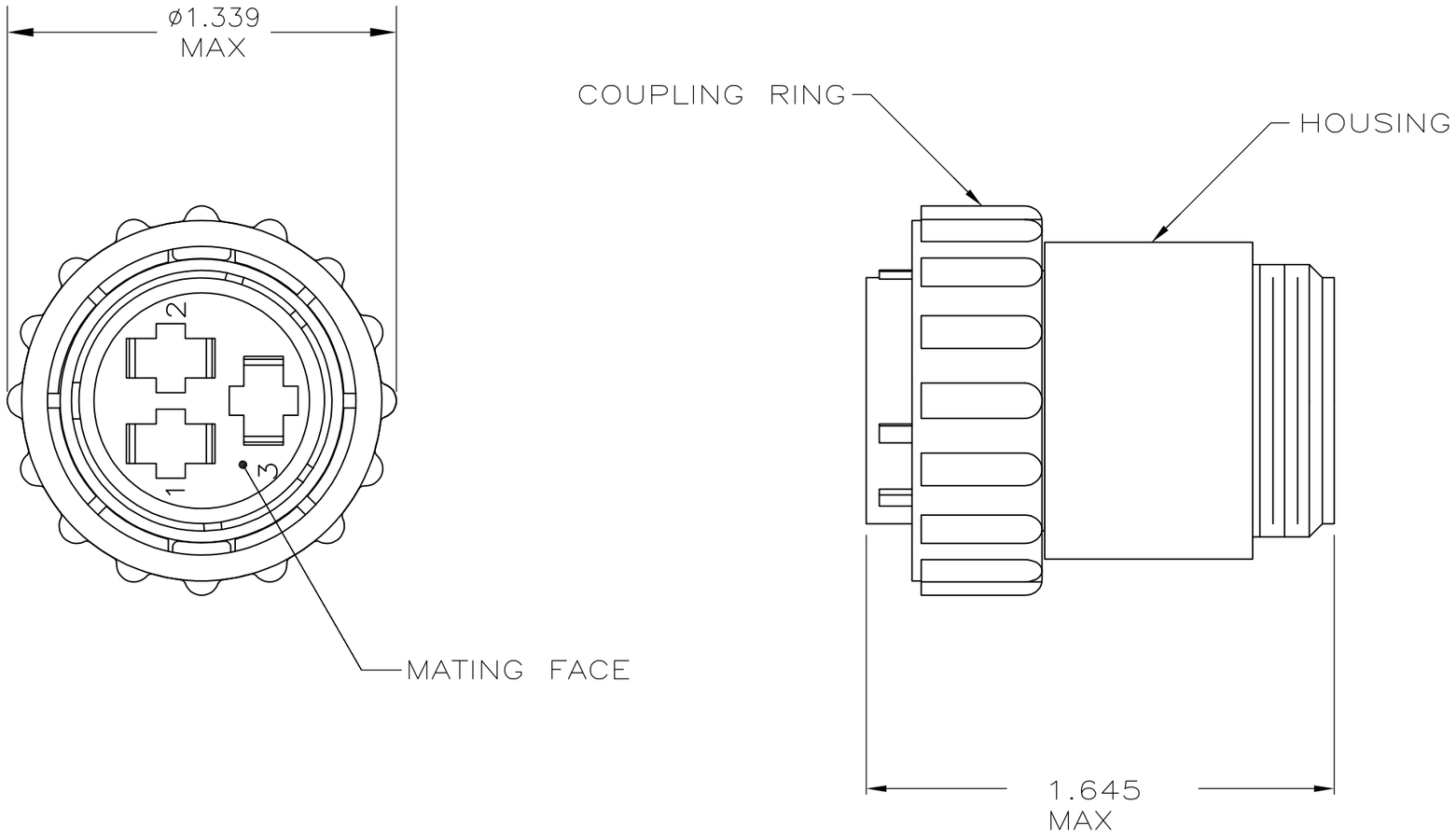

1977919-1

PART NUMBER

THIS DRAWING IS A CONTROLLED DOCUMENT.

DIMENSIONS: INCHES

TOLERANCES UNLESS OTHERWISE SPECIFIED:

0 PLC	± -
1 PLC	± -
2 PLC	± -
3 PLC	± -
4 PLC	± -
ANGLES	± -

MATERIAL: SEE

FINISH: -

DWN KIRAN HOLAL 17JAN13
CHK Z MARK 17JAN13
APVD Z MARK 17JAN13
PRODUCT SPEC —
APPLICATION SPEC —
WEIGHT —

TE Connectivity

NAME: CPC PLUG ASSEMBLY, SERIES 3, 17-3 REVERSE SEX, UV RESISTANT

SIZE	CAGE CODE	DRAWING NO	RESTRICTED TO
A3	00779	C-1977919	—

CUSTOMER DRAWING

SCALE 2:1 SHEET 1 OF 1 REV A