| MATERIAL NUMBER | ENG NO. | DESCRIPTION | INSULATOR KEYING POSITION | HORSEPOWER RATING |
|---|---|---|---|---|
| 1122190015 | ARC30FHDA01 | ARC 30A FHD 125VAC 1P+N+G | 7 | 1 HP |
| 1122190016 | ARC30FHDB02 | ARC 30A FHD 250VAC 2P+G | | 3 HP |
| 1122190017 | ARC30FHDB03 | ARC 30A FHD 250VAC 3P+G | | 5 HP |
| 1122190018 | ARC30FHDAB04 | ARC 30A FHD 125/250VAC 2P+N+G | | NA |
| 1122190019 | ARC30FHDC02 | ARC 30A FHD 208VAC 2P+G | 16 | NA |
| 1122190020 | ARC30FHDC03 | ARC 30A FHD 208VAC 3P+G | | 5 HP |
| 1122190021 | ARC30FHDAC05 | ARC 30A FHD 120/208VAC 3P+N+G | | NA |
| 1122190022 | ARC30FHDD01 | ARC 30A FHD 277VAC 1P+N+G | 4 | NA |
| 1122190023 | ARC30FHDE02 | ARC 30A FHD 480VAC 2P+G | | NA |
| 1122190024 | ARC30FHDE03 | ARC 30A FHD 480VAC 3P+G | | 10 HP |
| 1122190025 | ARC30FHDDE05 | ARC 30A FHD 277/480VAC 3P+N+G | | NA |
| 1122190026 | ARC30FHDF02 | ARC 30A FHD 600VAC 2P+G | 14 | NA |
| 1122190027 | ARC30FHDF03 | ARC 30A FHD 600VAC 3P+G | | NA |
| 1122190028 | ARC30FHDGF05 | ARC 30A FHD 347/600VAC 3P+N+G | | NA |

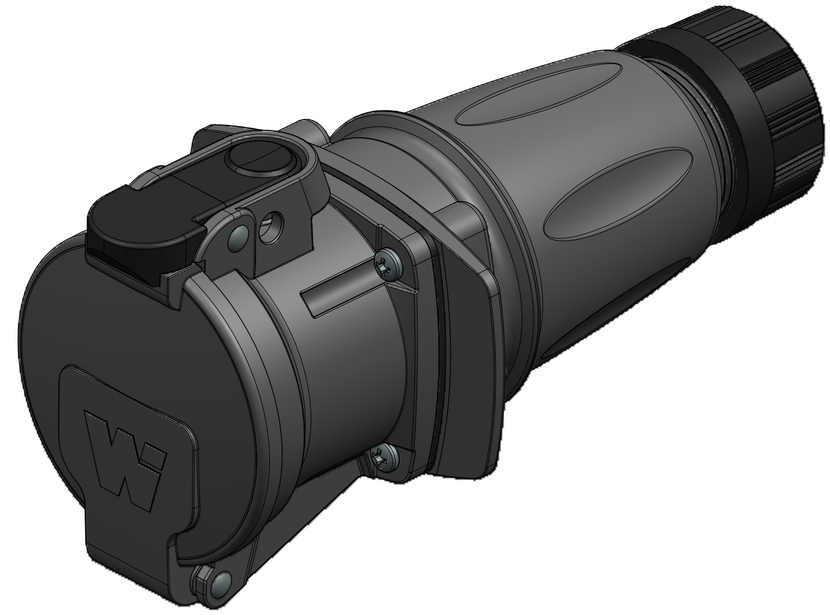

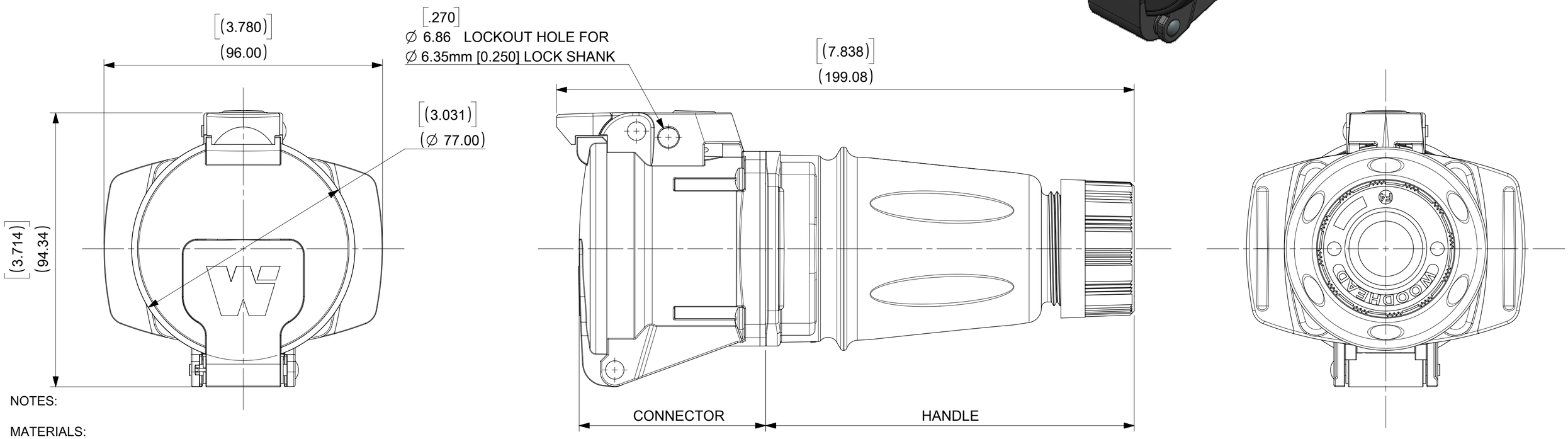


NOTES:

MATERIALS:
- HOUSINGS AND INSULATORS: GLASS FILLED PBT
- CONTACTS: COPPER ALLOY WITH A SILVER NICKEL TIP, SILVER PLATED
- MOUNTING AND INTERFACE GASKETS: SILICONE
- GROMMET - RUBBER
- FRICTION RING - NATURAL POLYETHYLENE
- COMPRESSION NUT - BLACK PBT
- SELF TAPPING SCREWS - STAINLESS STEEL

RATINGS:
- CURRENT: 30 AMPS
- VOLTAGE AND HORSEPOWER: SEE TABLE
- OPERATING TEMPERATURE: -25°C (-13°F) TO 60°C (140°F)
- ENVIRONMENTAL: TYPE 4X, IP69K
- WIRING CAPACITY: 12AWG MIN. TO 8 AWG MAX.
- TORQUE TERMINAL SCREWS TO 1.7 N-M (15 in/lbs)
- AGENCY: UL LISTING PENDING
  - SWITCH RATED RECEPTACLE/CONNECTOR
  - BRANCH CIRCUIT DISCONNECT SWITCH
  - MOTOR CIRCUIT DISCONNECT SWITCH IF HP RATED

CONNECTOR AND HANDLE ARE PACKAGED AS SUB-ASSEMBLIES AND WILL REQUIRE END USER ASSEMBLY.

THIS DRAWING REPLACES SD-112219-002.

| GROMMET P/N | GROMMET COLOR | CABLE DIAMETER RANGE |
|---|---|---|
| 1301800411 | GRAY | 12.7mm - 15.9mm (.500" - .625") |
| 1301800283 | ORANGE | 15.9mm - 19.0mm (.625" - .750") |
| 1301800413 | BLACK | 19.0mm - 22.2mm (.750" - .875") |

ARC30FHDE03 SHOWN

THIS DRAWING CONTAINS INFORMATION THAT IS PROPRIETARY TO MOLEX ELECTRONIC TECHNOLOGIES, LLC AND SHOULD NOT BE USED WITHOUT WRITTEN PERMISSION

SYMBOLS: = 0 (A) = 0 (C) = 0 (F) = 0 (S) = 0 = 0 (C) = 0 = 0 = 0 = 0

DIMENSION UNITS: INCH — SCALE: 1:1

GENERAL TOLERANCES (UNLESS SPECIFIED)

| | MM | INCH |
|---|---|---|
| 4 PLACES | ± | ± |
| 3 PLACES | ± | ± |
| 2 PLACES | ± | ± |
| 1 PLACE | ± | ± |
| 0 PLACES | ± | ± |
| ANGULAR TOL | ± ° | |

DRAFT WHERE APPLICABLE MUST REMAIN WITHIN DIMENSIONS

CURRENT REV DESC: ADDED 10HP,NEW NOTES

EC NO: 604773
DRWN: MJANTELEZIO 2018/09/20
CHK'D: JFMURPHY 2018/11/05
APPR: JFMURPHY 2018/11/05

INITIAL REVISION:
DRWN: DRWN BY XXXX/XX/XX
APPR: APPR BY XXXX/XX/XX

THIRD ANGLE PROJECTION — DRAWING: C-SIZE — SERIES: 112219

molex

ARC 30A FHD 480VAC 3P+G

PRODUCT CUSTOMER DRAWING

| DOCUMENT NUMBER | DOC TYPE | DOC PART | REVISION |
|---|---|---|---|
| 1122190024 | PSD | 000 | B2 |

MATERIAL NUMBER — CUSTOMER: GENERAL MARKET — SHEET NUMBER: 1 OF 2

| DOCUMENT STATUS | P1 | RELEASE DATE | 2018/11/05 17:31:25 |
|---|---|---|---|

FORMAT: Eng-lega-master-tb-prod-C
REVISION: D
DATE: 2018/01/18

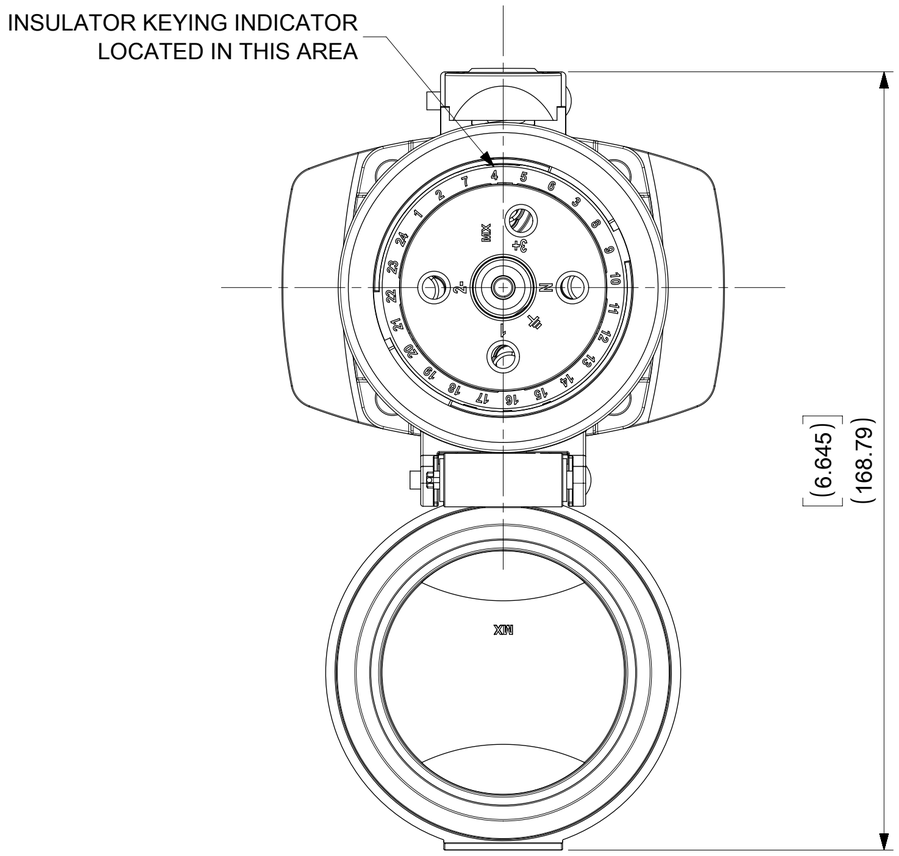


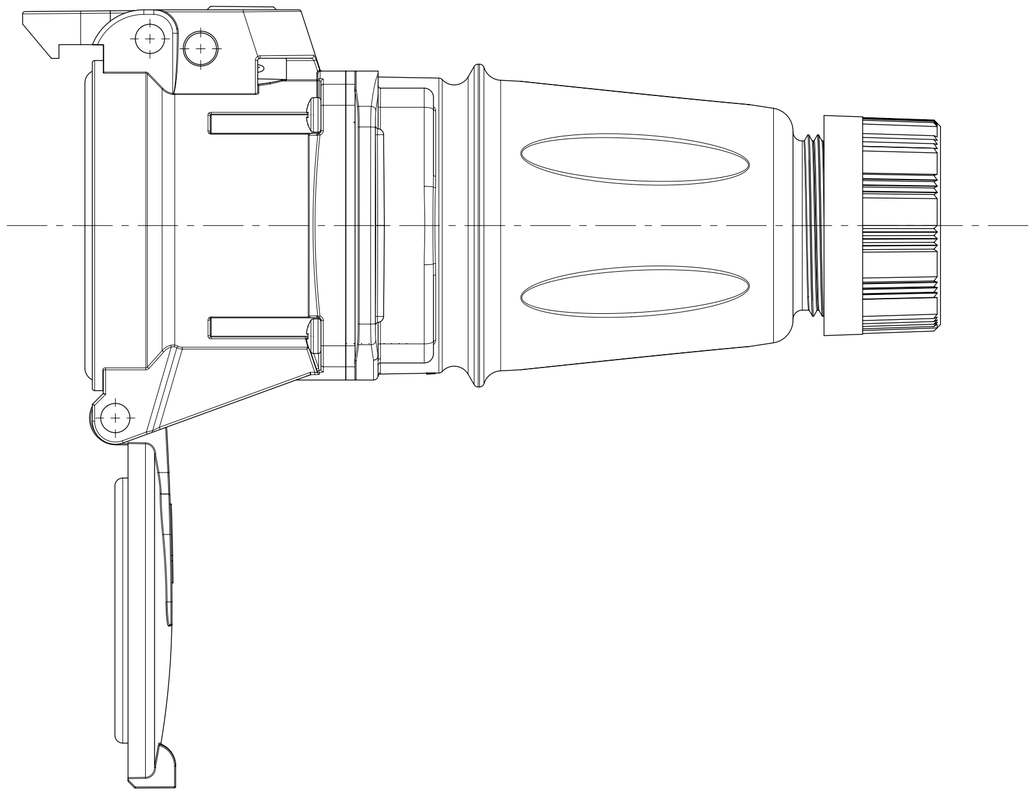

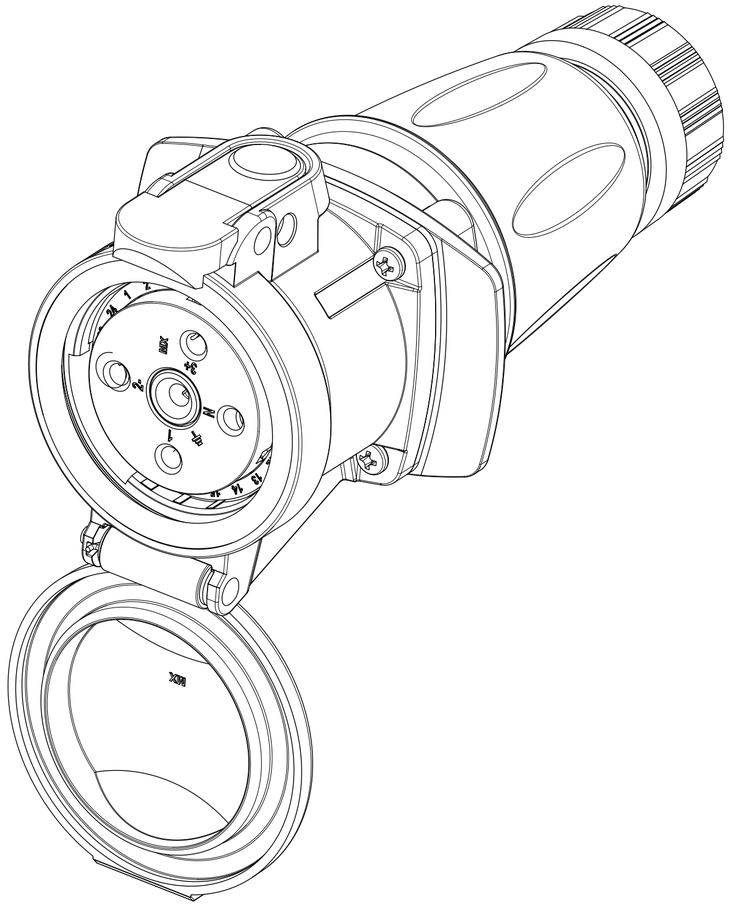

ARC30FHDE03 SHOWN

| SYMBOLS | THIS DRAWING CONTAINS INFORMATION THAT IS PROPRIETARY TO MOLEX ELECTRONIC TECHNOLOGIES, LLC AND SHOULD NOT BE USED WITHOUT WRITTEN PERMISSION | | | |
|---|---|---|---|---|
| = 0 | DIMENSION UNITS: INCH | SCALE: 1:1 | CURRENT REV DESC: ADDED 10HP,NEW NOTES | molex |
| = 0 | GENERAL TOLERANCES (UNLESS SPECIFIED) | | | |
| = 0 | MM / INCH | | EC NO: 604773 | ARC 30A FHD 480VAC 3P+G |
| = 0 | 4 PLACES ± / ± | | DRWN: MJANTELEZIO 2018/09/20 | |
| = 0 | 3 PLACES ± / ± | | CHK'D: JFMURPHY 2018/11/05 | |
| = 0 | 2 PLACES ± / ± | | APPR: JFMURPHY 2018/11/05 | PRODUCT CUSTOMER DRAWING |
| = 0 | 1 PLACE ± / ± | | INITIAL REVISION: | DOCUMENT NUMBER / DOC TYPE / DOC PART / REVISION |
| = 0 | 0 PLACES ± / ± | | DRWN: DRWN BY XXXX/XX/XX | 1122190024 / PSD / 000 / B2 |
| = 0 | ANGULAR TOL ± ° | | APPR: APPR BY XXXX/XX/XX | |
| = 0 | DRAFT WHERE APPLICABLE MUST REMAIN WITHIN DIMENSIONS | THIRD ANGLE PROJECTION | DRAWING: C-SIZE / SERIES: 112219 | MATERIAL NUMBER / CUSTOMER: GENERAL MARKET / SHEET NUMBER: 2 OF 2 |

| DOCUMENT STATUS | P1 | RELEASE DATE | 2018/11/05 17:31:25 |
|---|---|---|---|

FORMAT: Eng-lega-master-tb-prod-C
REVISION: 01
DATE: 2018/01/18