THIS DRAWING IS UNPUBLISHED. RELEASED FOR PUBLICATION .1997
© COPYRIGHT 1997 BY - ALL RIGHTS RESERVED.

PN 0-2 & 2-2

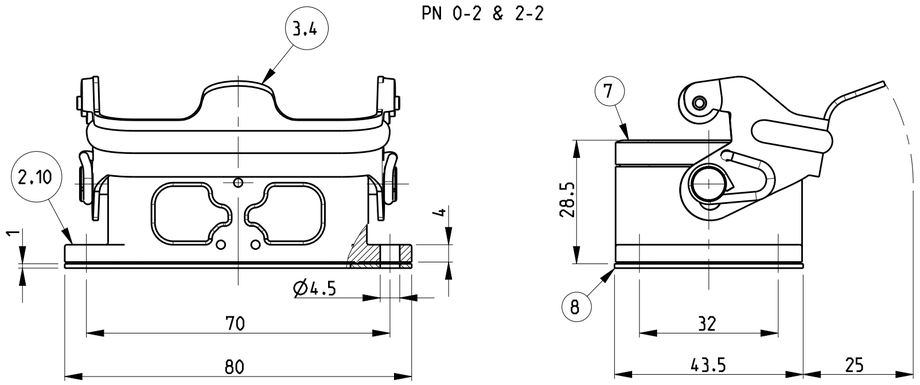

PN 1-2.0-1.0-3.
0-4 & 0-5 & 0-6

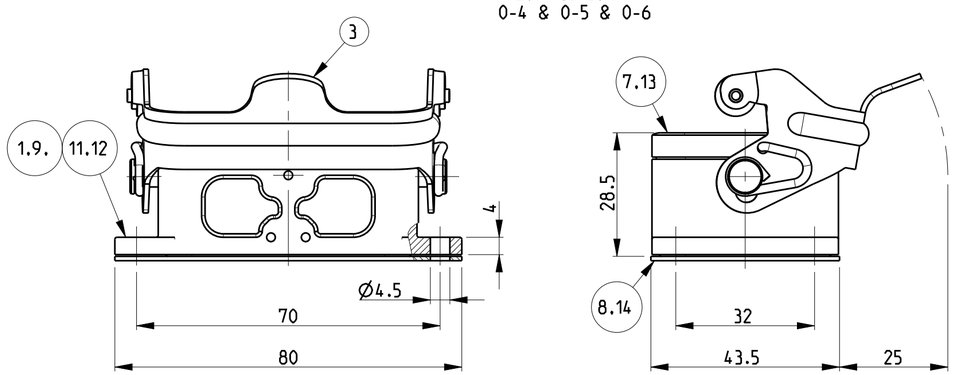

PN 1-8 & 2-8

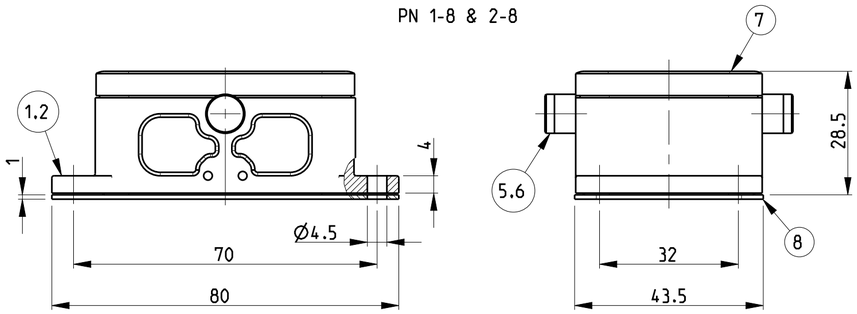

Panel cut-out

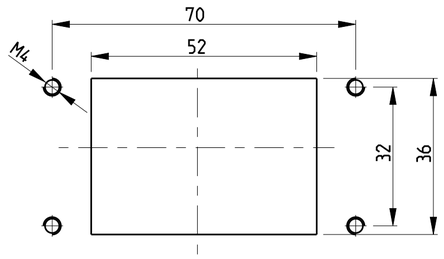

REVISIONS					
P	LTR	DESCRIPTION	DATE	DWN	APVD
	B	ECR-15-015803	19APR2016	GCM	JB
	B1	ECR-16-015318	16AUG2017	GR	MKO
	B2	ECR-16-016768	15NOV2017	GR	MKO
	B3	ECR-17-013084	28MAR2018	SG	MKO

NOTES.

1 Material:Housing:Aluminium Diecasting Alloy
Seals: Neoprene

2 Surface-Varnish Grey
-Aluminium Oxide +
Varnish Black

3 Varnish on the inside not necessary

4 Packaging
Quantity 5 Pieces in a box

PN 0-2 & 2-2	PN 1-2.0-1.0-3. 0-4 & ~~0-5~~ & ~~0-6~~	PN 1-8 & ~~2-8~~
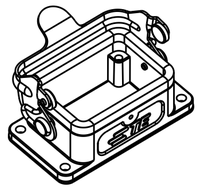	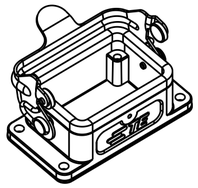	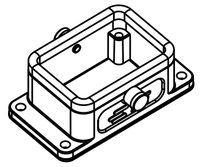
SCALE 1:2	SCALE 1:2	SCALE 1:2

0-6	0-5	0-4	0-3	0-2	0-1	6-2	2-8	1-8	2-2	1-2	DESCRIPTION	MATERIAL	SURFACE	COLOR	ITEM NO	NOTES
											Flange seal	Viton			14	
											Profile seal	Viton			13	
	1										Surface mounted housing bottom entry HB	Aluminium		White RAL 9010	12	Without logo
		1	1								Surface mounted housing bottom entry HB	Aluminium		Grey	11	Without logo
				1							Surface mounted housing bottom entry HB	Aluminium		Without varnish	10	
					1						Surface mounted housing bottom entry HB	Aluminium		Borning ried	9	
	1	1	1	1	1	1	1	1	1	1	Flange seal	Neoprene		Black	8	
	1	1	1	1	1	1	1	1	1	1	Profile seal	Neoprene		Black	7	
							2				ZB-Clip bolt	Stainless steel			6	
								2			ZB-Clip bolt	Steel	Zinc plated	Blue	5	
						1			1		LB-Side clip	Stainless steel			4	
1	1	1	1	1	1					1	LB-Side clip	Steel	Zinc plated	Blue	3	
							1		1		Surface mounted housing bottom entry HB-K	Aluminium	Aluminium oxide	Black	2	
						1		1		1	Surface mounted housing bottom entry HB	Aluminium		Grey	1	

ORDERING TEXT

HB.6.AG-LB
HB-K.6.AG-LB
HB-Z.6.AG-ZVGR
~~HB-K/Z.6.AG-ZVGR~~
HB.6.AG-LB
HB.6.AG-LB
~~HB.6.AG-LB~~
HB.6.AG-LB
HB.6.AG-LB.KM
~~HB.6.AG-LB~~
~~HB.6.AG-LB~~

OBSOLETE
OBSOLETE
OBSOLETE

THIS DRAWING IS A CONTROLLED DOCUMENT.

DIMENSIONS: mm

TOLERANCES UNLESS OTHERWISE SPECIFIED:
n.ISO 8015:
n.ISO 2768-mH-E:
n.DIN 16901-120
0 PLC ±
1 PLC ±
2 PLC ±
3 PLC ±
4 PLC ±
ANGLES ±

MATERIAL

FINISH

DWN Schweiger 23.07.1997
CHK Kramer 26.06.1998
APVD
PRODUCT SPEC 108-74001/74003
APPLICATION SPEC 114-74004/74005
WEIGHT -

TE Connectivity

NAME Surface mounted housing bottom entry HB6

SIZE A2 | CAGE CODE 00779 | DRAWING NO C-1102244 | RESTRICTED TO

CUSTOMER DRAWING | SCALE 1:1 | SHEET 1 OF 1 | REV B3

1471-9 (3/13)