REV	HDC26-18
A	

REVISIONS

SYM	DESCRIPTION	DATE	APPROVED
NC	NEW RELEASE PER E.O. P21248	2-17-12	R.D.R.
A	REVISED PER E.O. P21505	11/14/12	DM

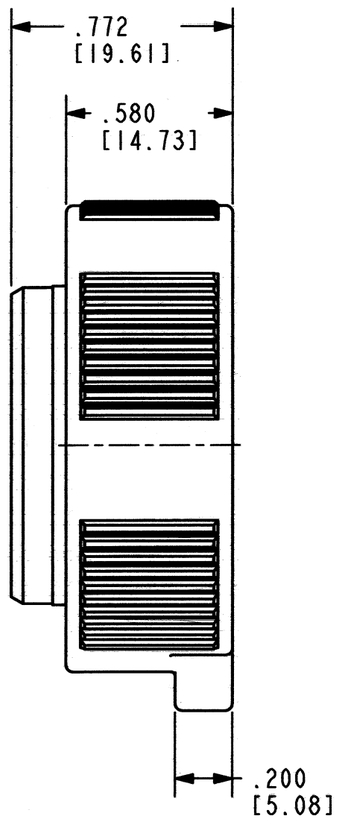

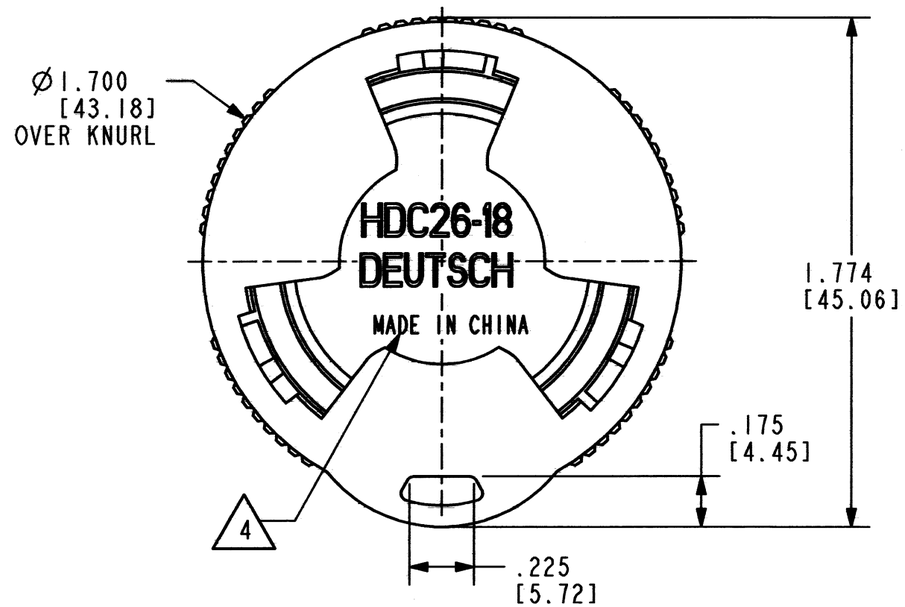

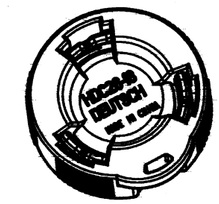

3D VIEW

4 COUNTRY OF ORIGIN IF OTHER THAN USA
EXAMPLE: MADE IN CHINA

3. MATERIAL: PLASTIC; COLOR: BLACK

2. DIMENSION TOLERANCE: ±.025 [.63]

NOTES: 1. ALL DIMENSIONS ARE IN INCHES [mm]

	SIGNATURE & DATE
DR	I. GRANTCHAROVA 02/06/12
CHK	4/13/12
PE	4/13/12
APPD	11/14/12
SCALE NONE	WT

PROTECTIVE CAP
FOR SIZE 18
RECEPTACLES
HD SERIES

ENVELOPE

EP | MATL. CODE

DEUTSCH INDUSTRIAL
3850 INDUSTRIAL AVE.
HEMET, CA 92545

B | HDC26-18

DWG SIZE | CODE 11139 | SHEET 1 OF 1