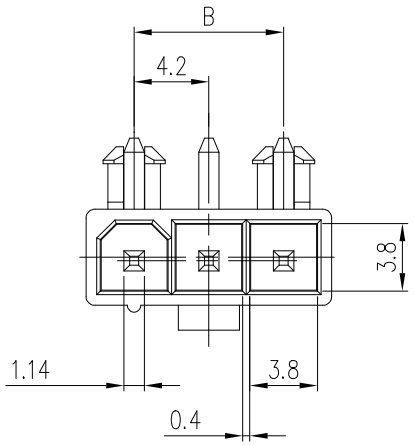

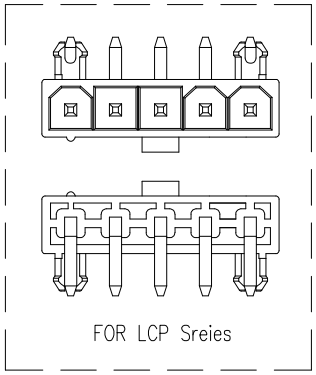

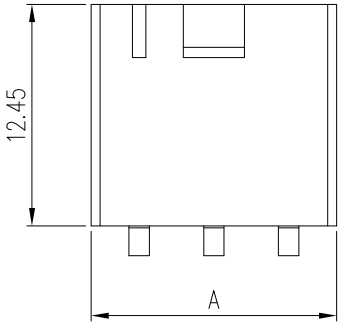

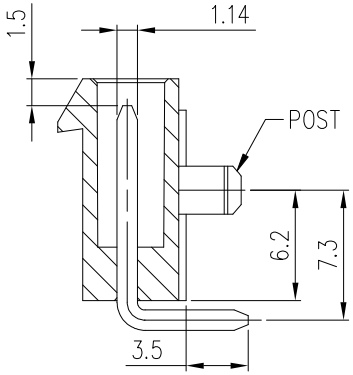

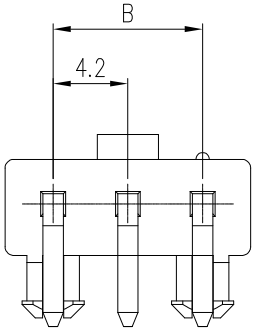

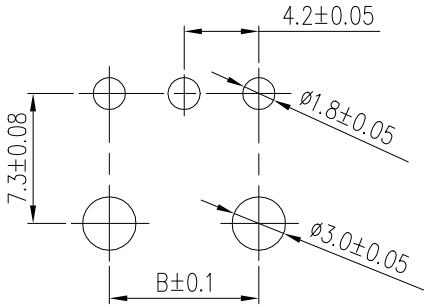

PCB LAYOUT COMPONENT SIDE

NOTES:
1. HSG MATERIAL: UL94V-0, MATERIAL AND COLOR: OPTIONAL
2. CONTACT MATERIAL: COPPER ALLOY
3. CONTACT FINISH:
   UNDERPLATING: Ni.
   CONTACT AREA AND SOLDER TAILS: OPTIONAL.
4. PRODUCT SPECIFICATION: GS-12-1181
5. PACKAGE SPECIFICATION: GS-14-2362
6. THIS PART MATES WITH FCI RECEPTACLE WIRE CONNECTOR 10136644
7. THE PART IS APPLICABLE FOR WAVE SOLDERING PROCESS WITH A 1.0~1.6mm THICKNESS PCB. LCP HSG IS CAPABLE FOR 260°C, 5 SEC. REFLOW SOLDERING PROCESS.
8. DIMENSION TABLE

POS.	A	B
03	13.8	8.4
04	18.0	12.6
05	22.2	16.8

PART NUMBER SCHEME:
10136646- XX X X X X LF

NO OF POS.
03: 3 POS.
~
05: 5 POS.

PLATING
1. 80u" TIN
2. GOLD FLASH
3. 15u" Au, TIN ON TAILS
4. 30u" Au, TIN ON TAILS

HSG COLOR
1. NATURAL
2. BLACK (NOT AVAILABLE FOR HSG 1)

HSG MATERIAL
1. PA66, GLOW WIRE COMPATIBLE
2. PA66, NON GLOW WIRE COMPATIBLE
3. LCP, GLOW WIRE COMPATIBLE
4. LCP, NON GLOW WIRE COMPATIBLE

POST
BLANK. WITH POST
1. WITHOUT POST

ltr	ecn no	dr	date
A		TAI	2015-09-25
B	ELX-T-25071	TAI	2016-10-03
C	ELX-N-29011	TONY	2018-01-11
D	ELX-N-30080	TONY	2018-05-04

mat'l. code
surface ISO 1302
tolerance ISO 406 ISO 1101
projection
tolerances unless otherwise specified
angles 0°±x°
linear .0±.30 / .00±.20 / .000±.10
mm
scale 1:1

dr	KENNY TAI	2015-08-21
engr	KENNY TAI	2015-08-21
chr	KENNY TAI	2015-08-21
appd	PM ZHENG	2015-08-21

product family: MINITEK PWR4.2
title: MINITEK PWR4.2 R/A HEADER, SINGLE ROW, THROUGH HOLE
dwg no: 10136646
sheet 1 of 1
size: A3
type: Product Customer Drawing

sheet index: revision D; sheet 1

© 2016 AFCI