Edco SLCP Series

Two Pair SLC Loop Protector (Modular)

The Edco SLCP Series are four-wire modules designed to protect signaling line circuits (SLC). The device has 0 ohms of resistance and offers line to ground protection.

EDCO PCB1B-WKEY BASE SOLD SEPARATELY

General Technical Specifications

Operating Voltage	5, 12, 18, 24, 32, 36, 48, 52 VDC
Clamping Voltage	8, 15, 20, 30, 36, 43, 50, 60 VDC
Operating Current	1 A
Peak Surge Current	250 A (8 x 20 µs)
Frequency Range	0 to 20 MHz
Insertion Loss	< 0.1 dB at 20 MHz
SPD Technology	Silicon Avalanche Diode (SAD)
Connection Type	Terminal block w/ compression lugs Terminals accept up to 10 AWG
Operating Temperature	-40°C to +85°C
Dimensions (in / mm)	2.0″ H x 1.0″ W x 2.5″ L [50.8 x 25.4 x 63.5 mm] (SLCP + PCB1B-WKEY Base)
Weight (oz / kg)	1 oz [0.03 kg]
Certifications	UL 497B
Warranty	5 years

Features

- Compatible with SLC circuits
- Line-to-ground protection
- State-of-the-art silicon technology
- Over-current protection
- UL listed 497B
- Requires Edco PCB1B-WKEY base
- PC642PTU (Pass Thru Unit) available for troubleshooting
- 5 year warranty

Ordering Information

How to Specify the Appropriate Model

MODEL	OPERATING VOLTAGE	CLAMPING VOLTAGE
SLCP-08	5 VDC	8 VDC
SLCP-15	12 VDC	15 VDC
SLCP-20	18 VDC	20 VDC
SLCP-30	24 VDC	30 VDC
SLCP-36	32 VDC	36 VDC
SLCP-43	36 VDC	43 VDC
SLCP-50	48 VDC	50 VDC
SLCP-60	52 VDC	60 VDC

EMERSON
Network Power

Installation Instructions

Terminal Assignments

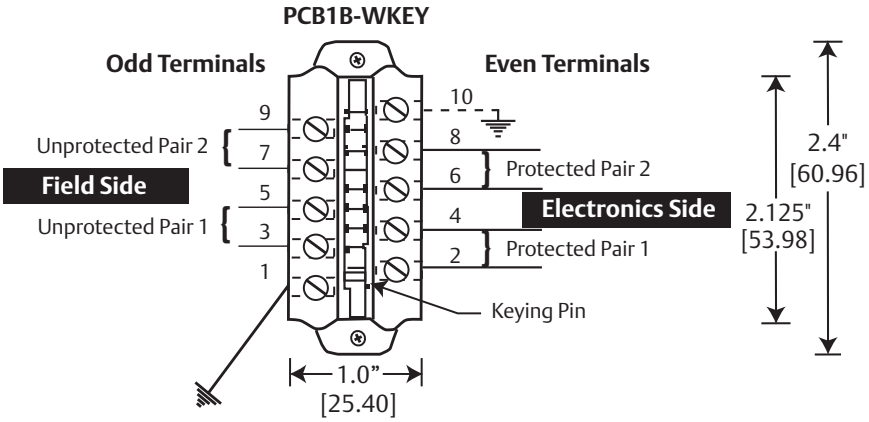

Ground Terminal 1 or 10 to Building Approved Ground (preferably AC Power safety ground).

NOTE: DO NOT daisy chain grounds. NOT intended for shield termination. Install ground in accordance with all applicable codes.

⚠ DANGER!

Only qualified personnel should install or service this system. Electrical safety precautions must be followed when installing or servicing this equipment. To prevent risk of electrical shock, turn off and lock out all power sources to the unit before making electrical connections or servicing.

Seulement le personnel qualifié doit installer ou maintenir ce systéme. Des précautions de sécurité en électricité doivent être suivis lors de l’installation ou de la maintenance de cet equipement. Pour eviter tout risque de choc électrique, débranchez et verouiller toutes les sources d’alimentation de cet equipement avant de.

Emerson Network Power Contact information

Surge Protection
100 Emerson Parkway
Binghamton, NY 13905
T: (607) 721-8840
T: (800) 288-6169
F: (607) 722-8713
E: SurgeTech@Emerson.com

www.EmersonNetworkPower.com/Surge

EMERSON
Network Power

IO-50116 5/14 Rev. 3 Printed in USA

Emerson Network Power, the Emerson Network Power logo and Edco are trademarks and service marks of Emerson Electric Co. ©2014 Emerson Electric Co.

While every precaution has been taken to ensure accuracy and completeness herein, Emerson Network Power Surge Protection assumes no responsibility, and disclaims all liability, for damages resulting from use of this information or for any errors or omissions. Specifications are subject to change without notice.