THIS DRAWING IS UNPUBLISHED. RELEASED FOR PUBLICATION 20
© COPYRIGHT 20 BY TYCO ELECTRONICS CORPORATION. ALL RIGHTS RESERVED.

SET UP GAGE 458637-3

LOC	DIST
A	66

REVISIONS

P	LTR	DESCRIPTION	DATE	DWN	APVD
	A	RELEASED	16JUL2009	LG	GB
	B	ECR-10-000763	13JAN2010	LG	GB

PART NUMBER	REV	TERMINATOR	FEED TYPE	DESCRIPTION
1238091-1	B	LEADMAKER	MECH POST FEED	CUTS CARRIER
1238091-2	B	BENCH	MECH PRE FEED	CUTS CARRIER
1238091-6	B	LEADMAKER	MECH POST FEED	CONTINUOUS CARRIER
7-1238091-1	B	LEADMAKER	MECH POST FEED	-1 AND SPARE PARTS
7-1238091-2	B	BENCH	MECH PRE FEED	-2 AND SPARE PARTS
7-1238091-6	B	LEADMAKER	MECH POST FEED	-6 AND SPARE PARTS
7-1238091-7	B	-	-	SPARE PARTS KIT

CRIMP DATA FEDERAL MOGUL TERMINAL TE CRIMP SPECS

TERMINAL NAME: TERMINAL

CRIMP	SIZE	TYPE	RANGE
WIRE	2.79 [.110 IN]	F	16-20 AWG
INSUL	3.43 [.135 IN]	O	Ø3.66 MAX [.144 IN MAX]

WIRE STRIP LENGTH 2.00-3.00 [.078-.118 IN]

APPL INSTRUCTIONS 408-8322

TERMINAL	NONE	-	FEED
APPL SPEC	-	-	15.29 [.602 IN]

TERMINALS APPLIED

TERMINAL	-	SEAL 5	-
TE PN	FED. MOGUL PN	TE PN	FED. MOGUL PN
1949978-1	ZCB-02022	286814-2	7158-3031-90
-	-	-	-
-	-	-	-

WIRE SIZE	CRIMP HEIGHT	PIN PN & LENGTH [IN]
18 AWG	1.48 ±0.05 [.058 ±.002 IN]	1-354779-5 [.3065]
-	-	
-	-	
-	-	
-	-	
-	-	
-	-	
-	-	
-	-	
-	-	
-	-	

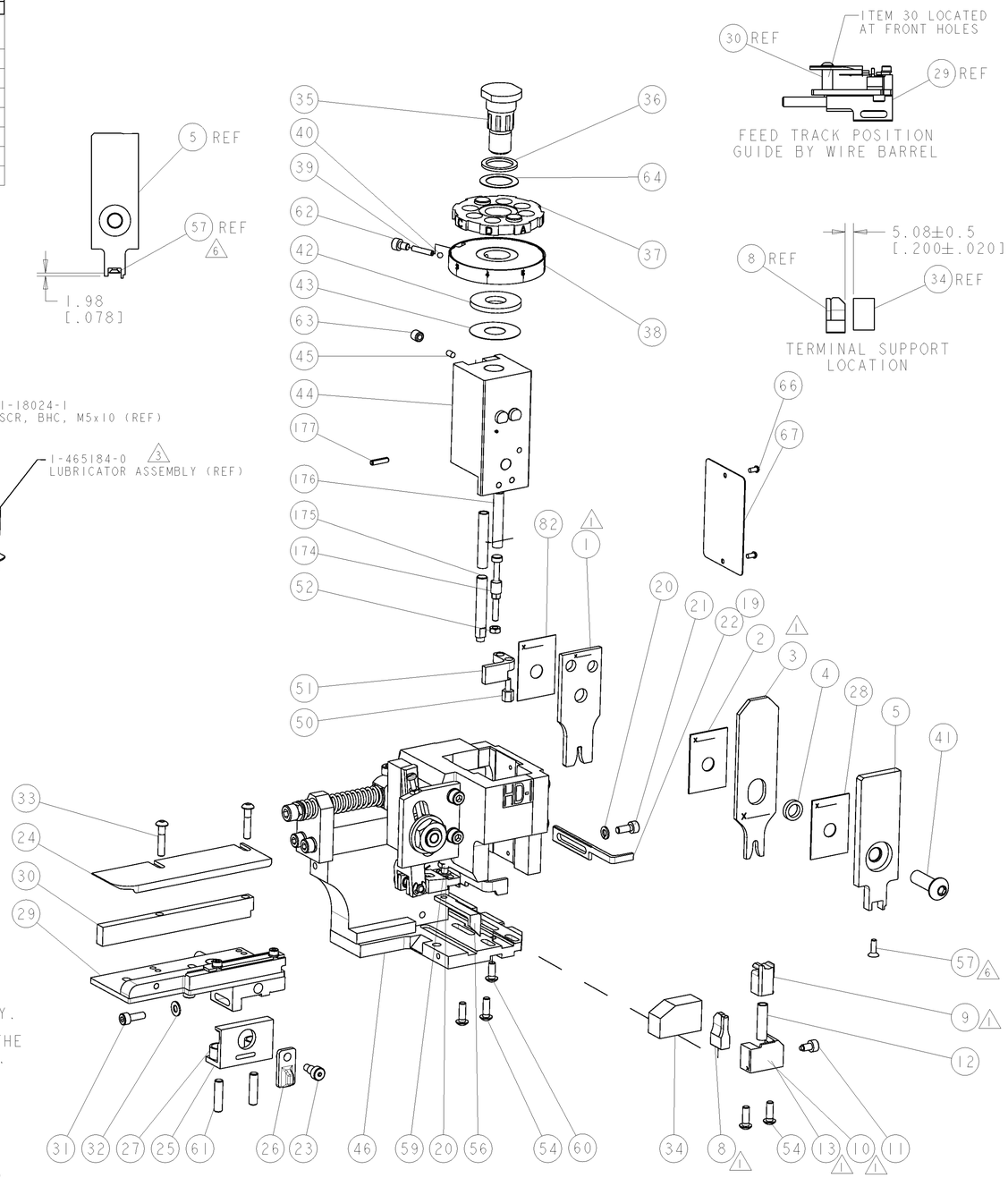

1. RECOMMENDED SPARE PARTS.
2. GREASE RAM, CAM, CAM FOLLOWER AND FEED ROD LIGHTLY.
3. CERTAIN TERMINALS REQUIRE LUBRICATION. REFER TO THE APPLICATOR INSTRUCTION SHEET FOR MORE INFORMATION.
4. LUBRICATE DAILY PER THE APPLICATOR INSTRUCTION SHEET SUPPLIED WITH THE APPLICATOR.
5. THE INSULATION RANGE LISTED IS FOR THE TERMINAL. THE INSULATION RANGE FOR THE SEAL IS Ø1.63-2.4mm.
6. APPLY TORQ-SEAL IN ALLEN SOCKET TO FILL HOLE AFTER FLAT HD HAS BEEN ADJUSTED TO CORRECT HEIGHT AT QUALIFICATION. APPLY #1-23419-5 LOC-TITE TO THREADS.

VIEW B ROTATED 180°

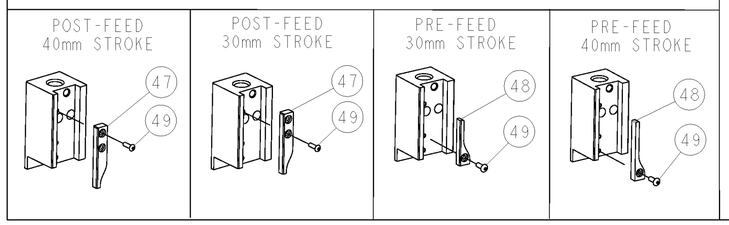

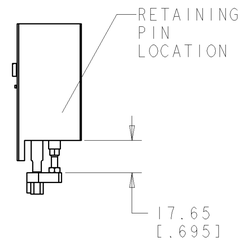

HOLDDOWN SET-UP

-77	-76	-72	-71	-6	-2	-1	PART NO	DESCRIPTION	ITEM NO
-	1	1	1	1	1	1	993111-8	PIN, SLOTTED SPRING 3.0 X 12.0	177
-	2	2	2	2	2	2	3-22280-7	SPRING, COMPRESSION	176
-	1	1	1	1	1	1	1752353-1	GUIDE PIN,HOLDDOWN	175
-	1	1	1	1	1	1	1901680-1	GUIDE PIN,HOLDDOWN	174
-	1	1	1	1	1	1	455888-3	SPACER, CRIMPER	82
-	1	1	1	1	1	1	1338705-1	DOCUMENTATION PACKAGE	71
-	1	1	1	1	1	1	461264-1	PLATE, IDENTIFICATION	67
-	2	2	2	2	2	2	21017-2	SCREW, DRIVE	66
-	1	1	1	1	1	1	986950-1	WASHER, FLAT PRECISION	64
-	1	1	1	1	1	1	3-18031-0	SCR, SET, CUP POINT M6 X 6.0	63
-	1	1	1	1	1	1	18023-9	SCR, SKT HD CAP M4 X 6.0	62
-	2	2	2	2	2	2	2-18032-5	SCR, SET, FLT POINT M5 X 20.0	61
-	1	1	1	1	1	1	18024-7	SCR, BTN SKT HD CAP (M4 X 10.0)	60
-	1	1	1	1	1	1	5-18022-2	SCR, HEX HD CAP M4 X 8.0	59
-	1	1	1	1	1	1	985575-3	SCR, FLT SKT HD CAP M3 X 10.0	57
-	1	1	1	1	1	1	1338685-1	PAWL, FEED	56
-	4	4	4	4	4	4	18024-8	SCR, BTN SKT HD CAP (M4 X 12.0)	54
-	1	1	1	1	1	1	1-18030-0	NUT, HEX, REG M3.5	52
-	1	1	1	1	1	1	1901681-1	HOLDDOWN, TERMINAL	51
-	1	1	1	1	1	1	1-1752354-0	STANDOFF,HOLD-DOWN	50
-	1	1	1	1	1	1	18024-3	SCR, BTN SKT HD CAP (M3 X 10.0)	49
-	-	1	-	-	1	-	1338675-1	CAM, UNIVERSAL PRE FEED	48
-	1	-	1	1	-	1	1338676-1	CAM, UNIVERSAL POST-FEED	47
-	1	1	1	1	1	1	1320999-3	APPLICATOR SUBASSEMBLY, HDI	46
-	1	1	1	1	1	1	690191-1	PLUG,NYLON	45
-	1	1	1	1	1	1	1633724-1	RAM, (SIDE FEED)	44
-	1	1	1	1	1	1	690125-1	SHIM SUB-ASSY	43
-	1	1	1	1	1	1	690124-1	WASHER, RAM (.115)	42
-	1	1	1	1	1	1	2-18024-6	SCR, BTN SKT HD CAP (M8 X 25.0)	41
-	1	1	1	1	1	1	23241-1	BALL, STEEL	40
-	1	1	1	1	1	1	2-22278-7	SPRING, COMPRESSION	39
-	1	1	1	1	1	1	1320922-1	DISC, ADJUST, INSULATION CRIMP	38
-	1	1	1	1	1	1	354777-1	WIRE DISC, ASSEMBLY	37
-	1	1	1	1	1	1	22480-5	SPRING, COMPRESSION	36
-	1	1	1	1	1	1	690212-1	POST, RAM	35
-	1	1	1	1	1	1	1752356-3	SUPPORT, TERMINAL	34
-	2	2	2	2	2	2	1-18024-0	SCR, BTN SKT HD CAP (M4 X 20.0)	33
-	1	1	1	1	1	1	18027-2	WASHER, FLAT, REG M4	32
-	1	1	1	1	1	1	1-18023-2	SCR, SKT HD CAP M4 X 12.0	31
-	1	1	1	1	1	1	1-1320908-5	SPACER, STRIP GUIDE	30
-	1	1	1	1	1	1	1633073-1	STRIP GUIDE ASSEMBLY	29
-	1	1	1	1	1	1	455888-6	SPACER, CRIMPER	28
-	2	2	2	2	2	2	1-22284-0	SPRING, COMPRESSION	27
-	1	1	1	1	1	1	356835-1	LEVER, DRAG RELEASE	26
-	1	1	1	1	1	1	240792-1	DRAG, TERMINAL	25
-	1	1	1	1	1	1	1320928-1	PLATE, STRIP GUIDE	24
-	1	1	1	1	1	1	980371-4	SCR, SKT HD SHLDR 5.0 DIA X 6.0	23
-	1	-	1	1	-	1	690472-2	STRIPPER	22
-	1	1	1	1	1	1	1-18023-1	SCR, SKT HD CAP M4 X 10.0	21
-	2	2	2	2	2	2	18025-2	WASHER, SPRG LOCK, REG M4	20
-	-	1	-	-	1	-	691353-1	STRIPPER	19
1	-	1	-	-	1	-	-	1338684-2	SHEAR HOLDER, FRONT	13
-	1	1	1	1	1	1	3-22280-3	SPRING, COMPRESSION	12
-	1	1	1	1	1	1	356885-5	STOP, SHEAR	11
1	-	-	1	1	-	1	1	1-1320921-0	SHEAR HOLDER, FRONT, CUT	10
1	-	1	1	1	1	1	1	318707-2	FLOATING SHEAR, FRONT	9
1	1	2	2	2	1	1	1	2-1633134-7	ANVIL, COMBINATION .110	8
-	-	-	-	-	-	-	-	-	-	7
-	-	-	-	-	-	-	-	-	-	6
-	1	1	1	1	1	1	1	1338680-1	DEPRESSOR, SHEAR	5
-	1	1	1	1	1	1	1	238011-9	BLOCK, CRIMPER SPACER	4
1	1	2	2	2	1	1	1	9-1583690-2	CRIMPER, INSUL O	3
-	1	1	1	1	1	1	1	455888-7	SPACER, CRIMPER	2
1	2	2	2	1	1	1	1	456408-3	CRIMPER, WIRE PREMIUM	1

THIS DRAWING IS A CONTROLLED DOCUMENT FOR TYCO ELECTRONICS CORPORATION. IT IS SUBJECT TO CHANGE AND THE CONTROLLING ENGINEERING ORGANIZATION SHOULD BE CONTACTED FOR THE LATEST REVISION.

DIMENSIONS: mm [IN]

TOLERANCES UNLESS OTHERWISE SPECIFIED:
0 PLC ±
1 PLC ±
2 PLC ±
3 PLC ±
4 PLC ±
ANGLES ±

MATERIAL - -
FINISH - -

DWN	L GROSS	14MAY2009
CHK	T ELBIN	14MAY2009
APVD	N DEMING	14MAY2009

PRODUCT SPEC -
APPLICATION SPEC See Table
WEIGHT -

Tyco Electronics
Tyco Electronics
Harrisburg, PA 17105-3608

NAME SIDE FEED HDI APPLICATOR - -

SIZE	CAGE CODE	DRAWING NO	RESTRICTED TO
A	00779	C-1238091	-

CUSTOMER ACCESSIBLE PRODUCTION DRAWING SCALE 3:5 SHEET 1 OF 1 REV B

AMP 4805 REV 31MAR2000

Pro/ENGINEER DRAWING