Si552

REVISION D

DUAL FREQUENCY VOLTAGE-CONTROLLED CRYSTAL OSCILLATOR (VCXO) 10 MHZ TO 1.4 GHZ

Features

- Available with any-rate output frequencies from 10–945 MHz and selected frequencies to 1.4 GHz
- Two selectable output frequencies
- 3rd generation DSPLL® with superior jitter performance
- 3x better frequency stability than SAW-based oscillators
- Internal fixed crystal frequency ensures high reliability and low aging
- Available CMOS, LVPECL, LVDS, and CML outputs
- 3.3, 2.5, and 1.8 V supply options
- Industry-standard 5 x 7 mm package and pinout
- Pb-free/RoHS-compliant

Ordering Information:

See page 10.

Applications

- SONET/SDH
- xDSL
- 10 GbE LAN/WAN
- Low-jitter clock generation
- Optical modules
- Clock and data recovery

Pin Assignments:

See page 9.

(Top View)

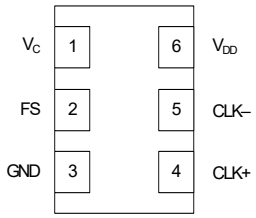

Description

The Si552 dual-frequency VCXO utilizes Silicon Laboratories' advanced DSPLL® circuitry to provide a very low jitter clock for all output frequencies. The Si552 is available with any-rate output frequency from 10 to 945 MHz and selected frequencies to 1400 MHz. Unlike traditional VCXOs, where a different crystal is required for each output frequency, the Si552 uses one fixed crystal frequency to provide a wide range of output frequencies. This IC-based approach allows the crystal resonator to provide exceptional frequency stability and reliability. In addition, DSPLL clock synthesis provides superior supply noise rejection, simplifying the task of generating low-jitter clocks in noisy environments typically found in communication systems. The Si552 IC-based VCXO is factory-configurable for a wide variety of user specifications including frequency, supply voltage, output format, tuning slope, and temperature stability. Specific configurations are factory programmed at time of shipment, thereby eliminating the long lead times associated with custom oscillators.

Functional Block Diagram

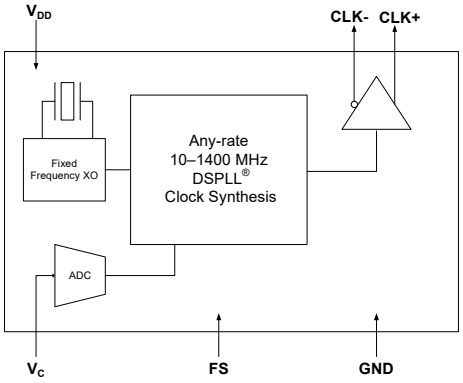

Copyright © 2018 by Silicon Laboratories

1. Electrical Specifications

Table 1. Recommended Operating Conditions

Parameter	Symbol	Test Condition	Min	Typ	Max	Units
Supply Voltage[1]	V_{DD}	3.3 V option	2.97	3.3	3.63	V
		2.5 V option	2.25	2.5	2.75	V
		1.8 V option	1.71	1.8	1.89	V
Supply Current	I_{DD}	Output enabled LVPECL CML LVDS CMOS	 — — — —	 120 108 99 90	 130 117 108 98	mA
		Tristate mode	—	60	75	mA
Frequency Select (FS)[2]		V_{IH}	0.75 x V_{DD}	—	—	V
		V_{IL}	—	—	0.5	V
Operating Temperature Range	T_A		–40	—	85	ºC

Notes:
1. Selectable parameter specified by part number. See Section 3. "Ordering Information" on page 10 for further details.
2. FS pin includes a 17 kΩ resistor to VDD.

Table 2. V_C Control Voltage Input

Parameter	Symbol	Test Condition	Min	Typ	Max	Units
Control Voltage Tuning Slope[1,2,3]	K_V	10 to 90% of V_{DD}	—	33 45 90 135 180 356	—	ppm/V
Control Voltage Linearity[4]	L_{VC}	BSL	–5	±1	+5	%
		Incremental	–10	±5	+10	%
Modulation Bandwidth	BW		9.3	10.0	10.7	kHz
V_C Input Impedance	Z_{VC}		500	—	—	kΩ
Nominal Control Voltage	V_{CNOM}	@ f_O	—	$V_{DD}/2$	—	V
Control Voltage Tuning Range	V_C		0		V_{DD}	V

Notes:
1. Positive slope; selectable option by part number. See Section 3. "Ordering Information" on page 10.
2. For best jitter and phase noise performance, always choose the smallest K_V that meets the application's minimum APR requirements. See "AN266: VCXO Tuning Slope (K_V), Stability, and Absolute Pull Range (APR)" for more information.
3. K_V variation is ±10% of typical values.
4. BSL determined from deviation from best straight line fit with V_C ranging from 10 to 90% of V_{DD}. Incremental slope determined with V_C ranging from 10 to 90% of V_{DD}.

Table 3. CLK± Output Frequency Characteristics

Parameter	Symbol	Test Condition	Min	Typ	Max	Units
Nominal Frequency[1,2,3]	f_O	LVDS/CML/LVPECL	10	—	945	MHz
		CMOS	10	—	160	MHz
Temperature Stability[1,4]		T_A = –40 to +85 °C	–20 –50 –100	— — —	+20 +50 +100	ppm
Absolute Pull Range[1,4]	APR		±12	—	±375	ppm
Aging		Frequency drift over first year.	—	—	±3	ppm
		Frequency drift over 15 year life.	—	—	±10	ppm
Power up Time[5]	t_{OSC}		—	—	10	ms
Settling Time After FS Change	t_{FRQ}		—	—	10	ms

Notes:
1. See Section 3. "Ordering Information" on page 10 for further details.
2. Specified at time of order by part number. Also available in frequencies from 970 to 1134 MHz and 1213 to 1417 MHz.
3. Nominal output frequency set by $V_{CNOM} = V_{DD}/2$.
4. Selectable parameter specified by part number.
5. Time from power up or tristate mode to f_O (to within ±1 ppm of f_O).

Table 4. CLK± Output Levels and Symmetry

Parameter	Symbol	Test Condition	Min	Typ	Max	Units
LVPECL Output Option[1]	V_O	mid-level	V_{DD} – 1.42	—	V_{DD} – 1.25	V
	V_{OD}	swing (diff)	1.1	—	1.9	V_{PP}
	V_{SE}	swing (single-ended)	0.55	—	0.95	V_{PP}
LVDS Output Option[2]	V_O	mid-level	1.125	1.20	1.275	V
	V_{OD}	swing (diff)	0.5	0.7	0.9	V_{PP}
CML Output Option[2]	V_O	2.5/3.3 V option mid-level	—	V_{DD} – 1.30	—	V
		1.8 V option mid-level	—	V_{DD} – 0.36	—	V
	V_{OD}	2.5/3.3 V option swing (diff)	1.10	1.50	1.90	V_{PP}
		1.8 V option swing (diff)	0.35	0.425	0.50	V_{PP}
CMOS Output Option[3]	V_{OH}	I_{OH} = 32 mA	0.8 x V_{DD}	—	V_{DD}	V
	V_{OL}	I_{OL} = 32 mA	—	—	0.4	V
Rise/Fall time (20/80%)	t_R, t_F	LVPECL/LVDS/CML	—	—	350	ps
		CMOS with C_L = 15 pF	—	1	—	ns
Symmetry (duty cycle)	SYM	LVPECL: V_{DD} – 1.3 V (diff) LVDS: 1.25 V (diff) CMOS: $V_{DD}/2$	45	—	55	%

Notes:
1. 50 Ω to V_{DD} – 2.0 V.
2. R_{term} = 100 Ω (differential).
3. C_L = 15 pF

Table 5. CLK± Output Phase Jitter

Parameter	Symbol	Test Condition	Min	Typ	Max	Units
Phase Jitter (RMS)[1,2,3] for $F_{OUT} \geq$ 500 MHz	ϕ_J	Kv = 33 ppm/V				ps
		12 kHz to 20 MHz (OC-48)	—	0.26	—	
		50 kHz to 80 MHz (OC-192)	—	0.26	—	
		Kv = 45 ppm/V				ps
		12 kHz to 20 MHz (OC-48)	—	0.27	—	
		50 kHz to 80 MHz (OC-192)	—	0.26	—	
		Kv = 90 ppm/V				ps
		12 kHz to 20 MHz (OC-48)	—	0.32	—	
		50 kHz to 80 MHz (OC-192)	—	0.26	—	
		Kv = 135 ppm/V				ps
		12 kHz to 20 MHz (OC-48)	—	0.40	—	
		50 kHz to 80 MHz (OC-192)	—	0.27	—	
		Kv = 180 ppm/V				ps
		12 kHz to 20 MHz (OC-48)	—	0.49	—	
		50 kHz to 80 MHz (OC-192)	—	0.28	—	
		Kv = 356 ppm/V				ps
		12 kHz to 20 MHz (OC-48)	—	0.87	—	
		50 kHz to 80 MHz (OC-192)	—	0.33	—	

Notes:

1. Refer to AN255, AN256, and AN266 for further information.
2. For best jitter and phase noise performance, always choose the smallest K_V that meets the application's minimum APR requirements. See "AN266: VCXO Tuning Slope (K_V), Stability, and Absolute Pull Range (APR)" for more information.
3. See "AN255: Replacing 622 MHz VCSO devices with the Si550 VCXO" for comparison highlighting power supply rejection (PSR) advantage of Si55x versus SAW-based solutions.
4. Max jitter for LVPECL output with V_C=1.65V, V_{DD}=3.3V, 155.52 MHz.
5. Max offset frequencies: 80 MHz for $F_{OUT} \geq$ 250 MHz, 20 MHz for 50 MHz $\leq F_{OUT}$ <250 MHz, 2 MHz for 10 MHz $\leq F_{OUT}$ <50 MHz.

Table 5. CLK± Output Phase Jitter (Continued)

Parameter	Symbol	Test Condition	Min	Typ	Max	Units
Phase Jitter (RMS)[1,2,3,4,5] for F_{OUT} of 125 to 500 MHz	ϕ_J	Kv = 33 ppm/V				ps
		12 kHz to 20 MHz (OC-48)	—	0.37	—	
		50 kHz to 80 MHz (OC-192)	—	0.33	—	
		Kv = 45 ppm/V				ps
		12 kHz to 20 MHz (OC-48)	—	0.37	0.4	
		50 kHz to 80 MHz (OC-192)	—	0.33	—	
		Kv = 90 ppm/V				ps
		12 kHz to 20 MHz (OC-48)	—	0.43	—	
		50 kHz to 80 MHz (OC-192)	—	0.34	—	
		Kv = 135 ppm/V				ps
		12 kHz to 20 MHz (OC-48)	—	0.50	—	
		50 kHz to 80 MHz (OC-192)	—	0.34	—	
		Kv = 180 ppm/V				ps
		12 kHz to 20 MHz (OC-48)	—	0.59	—	
		50 kHz to 80 MHz (OC-192)	—	0.35	—	
		Kv = 356 ppm/V				ps
		12 kHz to 20 MHz (OC-48)	—	1.00	—	
		50 kHz to 80 MHz (OC-192)	—	0.39	—	

Notes:

1. Refer to AN255, AN256, and AN266 for further information.
2. For best jitter and phase noise performance, always choose the smallest K_V that meets the application's minimum APR requirements. See "AN266: VCXO Tuning Slope (K_V), Stability, and Absolute Pull Range (APR)" for more information.
3. See "AN255: Replacing 622 MHz VCSO devices with the Si550 VCXO" for comparison highlighting power supply rejection (PSR) advantage of Si55x versus SAW-based solutions.
4. Max jitter for LVPECL output with V_C=1.65V, V_{DD}=3.3V, 155.52 MHz.
5. Max offset frequencies: 80 MHz for $F_{OUT} \geq$ 250 MHz, 20 MHz for 50 MHz $\leq F_{OUT}$ <250 MHz, 2 MHz for 10 MHz $\leq F_{OUT}$ <50 MHz.

Table 5. CLK± Output Phase Jitter (Continued)

Parameter	Symbol	Test Condition	Min	Typ	Max	Units
Phase Jitter (RMS)[1,2,5] for F_{OUT} 10 to 160 MHz CMOS Output Only	ϕ_J	Kv = 33 ppm/V 12 kHz to 20 MHz (OC-48) 50 kHz to 20 MHz	 — —	 0.63 0.62	 — —	ps
		Kv = 45 ppm/V 12 kHz to 20 MHz (OC-48) 50 kHz to 20 MHz	 — —	 0.63 0.62	 — —	ps
		Kv = 90 ppm/V 12 kHz to 20 MHz (OC-48) 50 kHz to 20 MHz	 — —	 0.67 0.66	 — —	ps
		Kv = 135 ppm/V 12 kHz to 20 MHz (OC-48) 50 kHz to 20 MHz	 — —	 0.74 0.72	 — —	ps
		Kv = 180 ppm/V 12 kHz to 20 MHz (OC-48) 50 kHz to 20 MHz	 — —	 0.83 0.8	 — —	ps
		Kv = 356 ppm/V 12 kHz to 20 MHz (OC-48) 50 kHz to 20 MHz	 — —	 1.26 1.2	 — —	ps

Notes:
1. Refer to AN255, AN256, and AN266 for further information.
2. For best jitter and phase noise performance, always choose the smallest K_V that meets the application's minimum APR requirements. See "AN266: VCXO Tuning Slope (K_V), Stability, and Absolute Pull Range (APR)" for more information.
3. See "AN255: Replacing 622 MHz VCSO devices with the Si550 VCXO" for comparison highlighting power supply rejection (PSR) advantage of Si55x versus SAW-based solutions.
4. Max jitter for LVPECL output with V_C=1.65V, V_{DD}=3.3V, 155.52 MHz.
5. Max offset frequencies: 80 MHz for $F_{OUT} \geq$ 250 MHz, 20 MHz for 50 MHz $\leq F_{OUT}$ <250 MHz, 2 MHz for 10 MHz $\leq F_{OUT}$ <50 MHz.

Table 6. CLK± Output Period Jitter

Parameter	Symbol	Test Condition	Min	Typ	Max	Units
Period Jitter*	J_{PER}	RMS	—	2	—	ps
		Peak-to-Peak	—	14	—	ps

***Note:** Any output mode, including CMOS, LVPECL, LVDS, CML. N = 1000 cycles. Refer to AN279 for further information.

Table 7. CLK± Output Phase Noise (Typical)

Offset Frequency	74.25 MHz 90 ppm/V LVPECL	491.52 MHz 45 ppm/V LVPECL	622.08 MHz 135 ppm/V LVPECL	Units
100 Hz	–87	–75	–65	dBc/Hz
1 kHz	–114	–100	–90	
10 kHz	–132	–116	–109	
100 kHz	–142	–124	–121	
1 MHz	–148	–135	–134	
10 MHz	–150	–146	–146	
100 MHz	n/a	–147	–147	

Table 8. Environmental Compliance

The Si552 meets the following qualification test requirements.

Parameter	Conditions/Test Method
Mechanical Shock	MIL-STD-883F, Method 2002.3 B
Mechanical Vibration	MIL-STD-883F, Method 2007.3 A
Solderability	MIL-STD-883F, Method 203.8
Gross & Fine Leak	MIL-STD-883F, Method 1014.7
Resistance to Solvents	MIL-STD-883F, Method 2016
Moisture Sensitivity Level	J-STD-020, MSL 1
Contact Pads	J-STD-020, MSL 1

Table 9. Thermal Characteristics

(Typical values TA = 25 ºC, V_{DD} = 3.3 V)

Parameter	Symbol	Test Condition	Min	Typ	Max	Unit
Thermal Resistance Junction to Ambient	θ_{JA}	Still Air	—	84.6	—	°C/W
Thermal Resistance Junction to Case	θ_{JC}	Still Air	—	38.8	—	°C/W
Ambient Temperature	T_A		–40	—	85	°C
Junction Temperature	T_J		—	—	125	°C

Table 10. Absolute Maximum Ratings[1]

Parameter	Symbol	Rating	Units
Maximum Operating Temperature	T_{AMAX}	85	ºC
Supply Voltage, 1.8 V Option	V_{DD}	–0.5 to +1.9	V
Supply Voltage, 2.5/3.3 V Option	V_{DD}	–0.5 to +3.8	V
Input Voltage (any input pin)	V_I	–0.5 to V_{DD} + 0.3	V
Storage Temperature	T_S	–55 to +125	ºC
ESD Sensitivity (HBM, per JESD22-A114)	ESD	2500	V
Soldering Temperature (Pb-free profile)[2]	T_{PEAK}	260	ºC
Soldering Temperature Time @ T_{PEAK} (Pb-free profile)[2]	t_P	20–40	seconds

Notes:

1. Stresses beyond those listed in Absolute Maximum Ratings may cause permanent damage to the device. Functional operation or specification compliance is not implied at these conditions. Exposure to maximum rating conditions for extended periods may affect device reliability.
2. The device is compliant with JEDEC J-STD-020C. Refer to Si5xx Packaging FAQ available for download from www.silabs.com/VCXO for further information, including soldering profiles.

2. Pin Descriptions

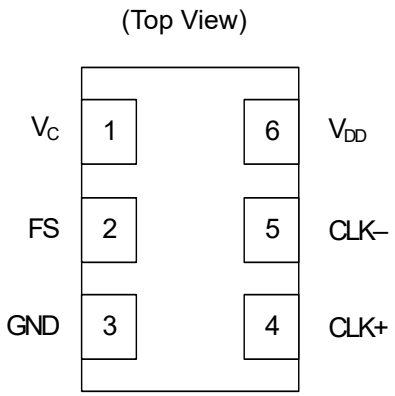

Table 11. Si552 Pin Descriptions

Pin	Name	Type	Function
1	V_C	Analog Input	Control Voltage
2	FS*	Input	Frequency Select: 0 = first frequency selected 1 = second frequency selected
3	GND	Ground	Electrical and Case Ground
4	CLK+	Output	Oscillator Output
5	CLK– (N/A for CMOS)	Output	Complementary Output (N/C for CMOS)
6	V_{DD}	Power	Power Supply Voltage
***Note:** FS includes a 17 kΩ pullup resistor to V_{DD}. See Section 3. "Ordering Information" on page 10 for details on frequency select and OE polarity ordering options.			

3. Ordering Information

The Si552 supports a variety of options including frequency, temperature stability, tuning slope, output format, and V_{DD}. Specific device configurations are programmed into the Si552 at time of shipment. Configurations are specified using the Part Number Configuration chart shown below. Silicon Labs provides a web browser-based part number configuration utility to simplify this process. Refer to www.silabs.com/VCXOPartNumber to access this tool and for further ordering instructions. The Si552 VCXO series is supplied in an industry-standard, RoHS-compliant, lead-free, 6-pad, 5 x 7 mm package. Tape and reel packaging is an ordering option.

552 X X XXXXXX D G R

552 Dual VCXO Product Family

R = Tape & Reel
Blank = Coil Tape

Operating Temp Range (°C)
G –40 to +85 °C

Device Revision Letter

6-digit Frequency Designator Code

Two unique frequencies can be specified within the following bands of frequencies : 10 to 945 MHz, 970 to 1134 MHz, and 1213 to 1417 MHz. A six digit code will be assigned for the specified combination of frequencies. Codes > 000100 refer to dual XOs programmed with the lower frequency value selected when FS = 0, and the higher value when FS = 1. Six digit codes < 000100 refer to dual XOs programmed with the higher frequency value selected when FS = 0, and the lower value when FS = 1.

1st Option Code

Code	VDD	Output Format
A	3.3	LVPECL
B	3.3	LVDS
C	3.3	CMOS
D	3.3	CML
E	2.5	LVPECL
F	2.5	LVDS
G	2.5	CMOS
H	2.5	CML
J	1.8	CMOS
K	1.8	CML

Notes:
CMOS available to 160 MHz.

2nd Option Code

Code	Temperature Stability ± ppm (max)	Tuning Slope Kv ppm/V (typ)	Minimum APR (±ppm) for VDD @ 3.3 V	2.5 V	1.8 V
A	100	180	100	75	25
B	100	90	30	Note 6	Note 6
C	50	180	150	125	75
D	50	90	80	30	25
E	20	45	25	Note 6	Note 6
F	50	135	100	75	50
G	20	356	375	300	235
H	20	180	185	145	105
J	20	135	130	104	70
K	100	356	295	220	155
M	20	33	12	Note 6	Note 6

Notes:
1. For best jitter and phase noise performance , always choose the smallest Kv that meets the application s minimum APR requirements. Unlike SAW-based solutions which require higher higher Kv values to account for their higher temperature dependence , the Si55x series provides lower Kv options to minimize noise coupling and jitter in real - world PLL designs. See AN255 and AN266 for more information.
2. APR is the ability of a VCXO to track a signal over the product lifetime . A VCXO with an APR of ±25 ppm is able to lock to a clock with a ± 25 ppm stability over 15 years over all operating conditions.
3. Nominal Pull range (±) = 0.5 x V_{DD} x tuning slope.
4. Nominal Absolute Pull Range (±APR) = Pull range – stability – lifetime aging
   = 0.5 x V_{DD} x tuning slope – stability – 10 ppm
5. Minimum APR values noted above include worst case values for all parameters .
6. Combination not available.

Example Part Number: 552AF000108DGR is a 5x7mm Dual VCXO in a 6 pad package. Since the six digit code (000108) is > 000100, f0 is 644.53125 MHz (lower frequency) and f1 is 693.48299 (higher frequency), with a 3.3V supply and LVPECL output. Temperature stability is specified as ± 50 ppm and the tuning slope is 135 ppm/V. The part is specified for a -40 to +85 C° ambient temperature range operation and is shipped in tape and reel format.

Figure 1. Part Number Convention

4. Package Outline and Suggested Pad Layout

Figure 2 illustrates the package details for the Si552. Table 12 lists the values for the dimensions shown in the illustration.

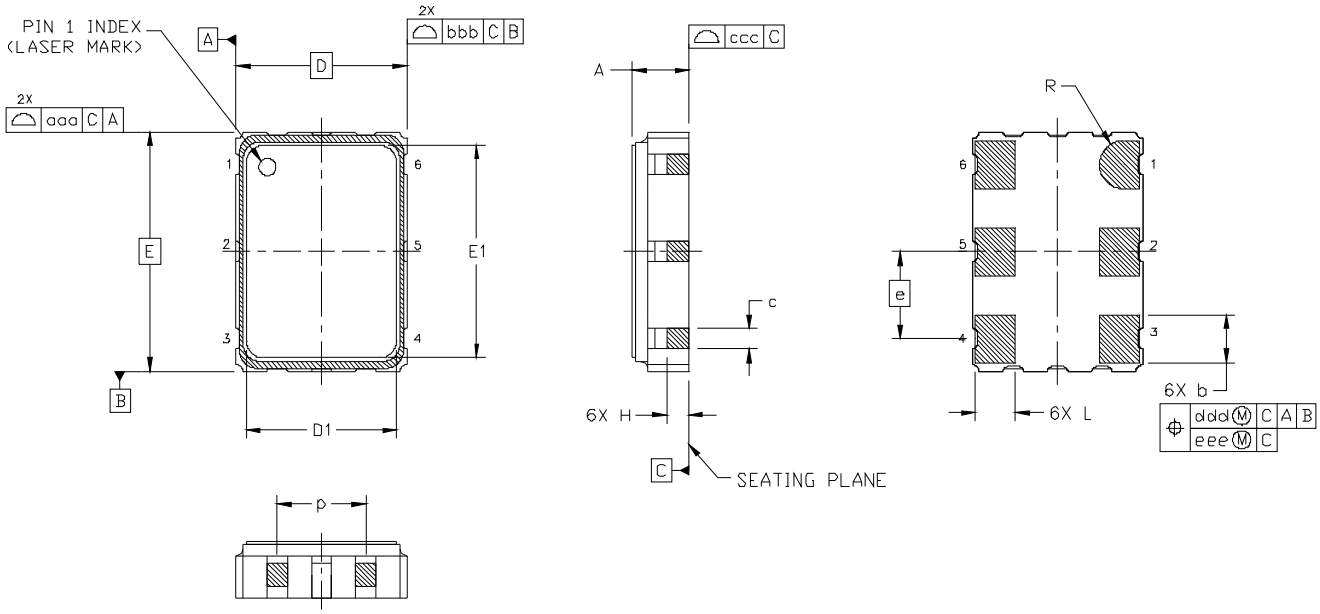

Figure 2. Si552 Outline Diagram

Table 12. Package Diagram Dimensions (mm)

Dimension	Min	Nom	Max
A	1.50	1.65	1.80
b	1.30	1.40	1.50
c	0.50	0.60	0.70
D		5.00 BSC	
D1	4.30	4.40	4.50
e		2.54 BSC.	
E		7.00 BSC.	
E1	6.10	6.20	6.30
H	0.55	0.65	0.75
L	1.17	1.27	1.37
p	1.80	—	2.60
R		0.70 REF	
aaa		0.15	
bbb		0.15	
ccc		0.10	
ddd		0.10	
eee		0.50	

5. 6-Pin PCB Land Pattern

Figure 3 illustrates the 6-pin PCB land pattern for the Si552. Table 13 lists the values for the dimensions shown in the illustration.

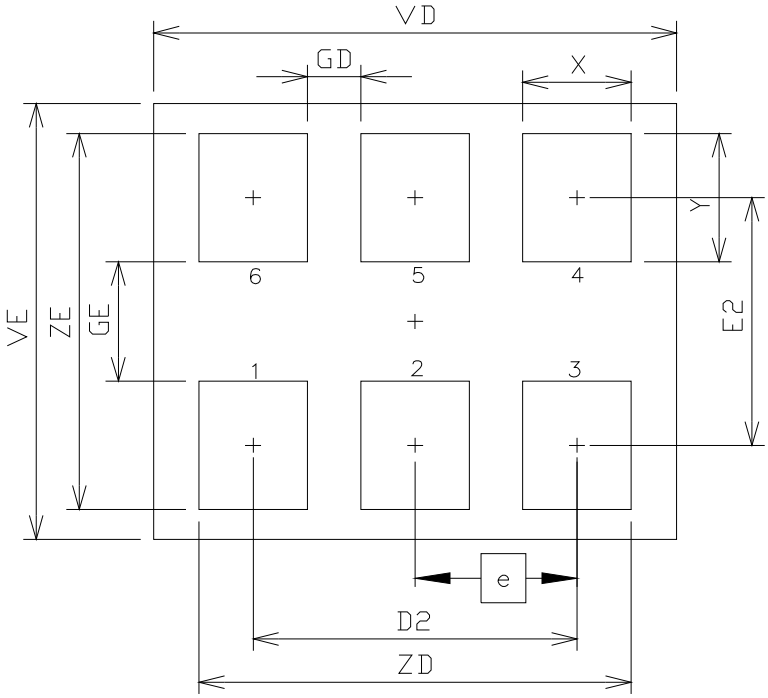

Figure 3. Si552 PCB Land Pattern

Table 13. PCB Land Pattern Dimensions (mm)

Dimension	Min	Max
D2	5.08 REF	
e	2.54 BSC	
E2	4.15 REF	
GD	0.84	—
GE	2.00	—
VD	8.20 REF	
VE	7.30 REF	
X	1.70 TYP	
Y	2.15 REF	
ZD	—	6.78
ZE	—	6.30

Notes:
1. Dimensioning and tolerancing per the ANSI Y14.5M-1994 specification.
2. Land pattern design based on IPC-7351 guidelines.
3. All dimensions shown are at maximum material condition (MMC).
4. Controlling dimension is in millimeters (mm).

6. Top Marking

6.1. Si552 Top Marking

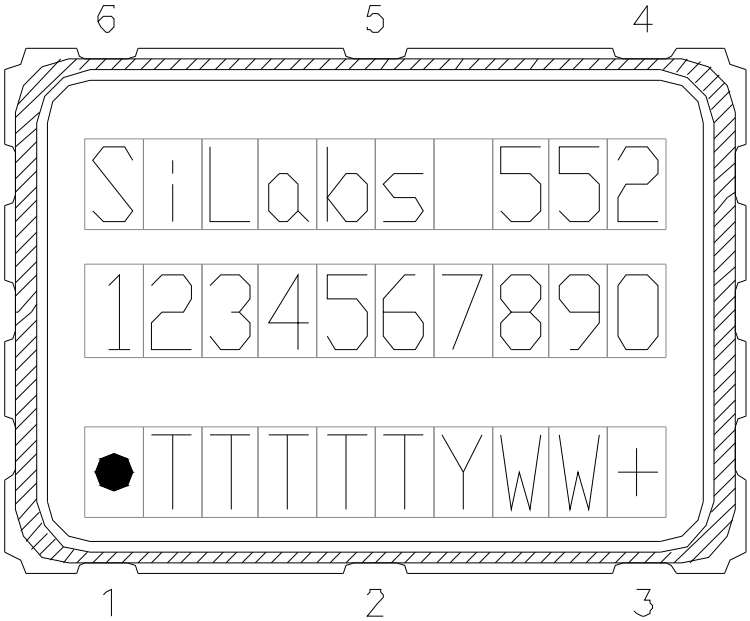

6.2. Top Marking Explanation

Line	Position	Description
1	1–10	“SiLabs”+ Part Family Number, 552 (First 3 characters in part number)
2	1–10	Si552: Option1+Option2+Freq(7)+Temp Si552 w/ 8-digit resolution: Option1+Option2+ConfigNum(6)+Temp
3	**Trace Code**	
	Position 1	Pin 1 orientation mark (dot)
	Position 2	Product Revision (D)
	Position 3–6	Tiny Trace Code (4 alphanumeric characters per assembly release instructions)
	Position 7	Year (least significant year digit), to be assigned by assembly site (ex: 2007 = 7)
	Position 8–9	Calendar Work Week number (1–53), to be assigned by assembly site
	Position 10	“+” to indicate Pb-Free and RoHS-compliant

DOCUMENT CHANGE LIST

Revision 0.6 to Revision 1.0

- Updated Table 4 on page 3.
  - Updated 2.5 V/3.3 V and 1.8 V CML output level specifications.
- Updated Table 5 on page 4.
  - Removed the words “Differential Modes: LVPECL/LVDS/CML” in the footnote referring to AN256.
  - Added footnotes clarifying max offset frequency test conditions.
  - Added CMOS phase jitter specs.
- Updated Table 10 on page 8.
  - Separated 1.8 V, 2.5 V/3.3 V supply voltage specifications.
- Updated and clarified Table 8 on page 7
  - Added “Moisture Sensitivity Level” and “Contact Pads” rows.
- Updated 6. "Top Marking" on page 13 to reflect specific marking information (previously, figure was generic).
- Updated 4. "Package Outline and Suggested Pad Layout" on page 11.
  - Added cyrstal impedance pin in Figure 2 on page 11 and Table 12 on page 11.
- Reordered spec tables and back matter to conform to data sheet quality conventions.

Revision 1.0 to Revision 1.1

- Added Table 9, “Thermal Characteristics,” on page 7.

Revision 1.1 to Revision 1.2

June, 2018

- Changed “Trays” to “Coil Tape” in section 3.“Ordering Information”.

ClockBuilder Pro

One-click access to Timing tools, documentation, software, source code libraries & more. Available for Windows and iOS (CBGo only).

www.silabs.com/CBPro

Timing Portfolio
www.silabs.com/timing

SW/HW
www.silabs.com/CBPro

Quality
www.silabs.com/quality

Support and Community
community.silabs.com

Disclaimer
Silicon Labs intends to provide customers with the latest, accurate, and in-depth documentation of all peripherals and modules available for system and software implementers using or intending to use the Silicon Labs products. Characterization data, available modules and peripherals, memory sizes and memory addresses refer to each specific device, and "Typical" parameters provided can and do vary in different applications. Application examples described herein are for illustrative purposes only. Silicon Labs reserves the right to make changes without further notice to the product information, specifications, and descriptions herein, and does not give warranties as to the accuracy or completeness of the included information. Without prior notification, Silicon Labs may update product firmware during the manufacturing process for security or reliability reasons. Such changes will not alter the specifications or the performance of the product. Silicon Labs shall have no liability for the consequences of use of the information supplied in this document. This document does not imply or expressly grant any license to design or fabricate any integrated circuits. The products are not designed or authorized to be used within any FDA Class III devices, applications for which FDA premarket approval is required or Life Support Systems without the specific written consent of Silicon Labs. A "Life Support System" is any product or system intended to support or sustain life and/or health, which, if it fails, can be reasonably expected to result in significant personal injury or death. Silicon Labs products are not designed or authorized for military applications. Silicon Labs products shall under no circumstances be used in weapons of mass destruction including (but not limited to) nuclear, biological or chemical weapons, or missiles capable of delivering such weapons. Silicon Labs disclaims all express and implied warranties and shall not be responsible or liable for any injuries or damages related to use of a Silicon Labs product in such unauthorized applications.

Trademark Information
Silicon Laboratories Inc.® , Silicon Laboratories®, Silicon Labs®, SiLabs® and the Silicon Labs logo®, Bluegiga®, Bluegiga Logo®, ClockBuilder®, CMEMS®, DSPLL®, EFM®, EFM32®, EFR, Ember®, Energy Micro, Energy Micro logo and combinations thereof, "the world's most energy friendly microcontrollers", Ember®, EZLink®, EZRadio®, EZRadioPRO®, Gecko®, Gecko OS, Gecko OS Studio, ISOmodem®, Precision32®, ProSLIC®, Simplicity Studio®, SiPHY®, Telegesis, the Telegesis Logo®, USBXpress® , Zentri, the Zentri logo and Zentri DMS, Z-Wave®, and others are trademarks or registered trademarks of Silicon Labs. ARM, CORTEX, Cortex-M3 and THUMB are trademarks or registered trademarks of ARM Holdings. Keil is a registered trademark of ARM Limited. Wi-Fi is a registered trademark of the Wi-Fi Alliance. All other products or brand names mentioned herein are trademarks of their respective holders.

Silicon Laboratories Inc.
400 West Cesar Chavez
Austin, TX 78701
USA

http://www.silabs.com