Product datasheet
Characteristics

XUZK2000

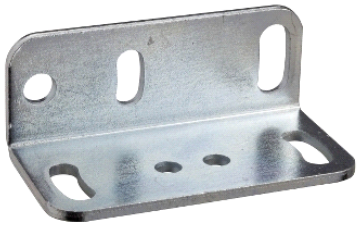

Main

Range of product	OsiSense XU
Accessory / separate part category	Mounting and fixing accessory
Accessory / separate part type	Fixing bracket
Product or component type	90° fixing bracket
Accessory / separate part destination	50 x 50 mm compact sensor
Material	Stamped steel

Complementary

Product compatibility	XUKC1 XUKR1
Product weight	0.09 lb(US) (0.04 kg)

Environment

Offer Sustainability

Not Green Premium product	Not Green Premium product
Compliant - since 0701 - Schneider Electric declaration of conformity	Compliant - since 0701 - Schneider Electric declaration of conformity
WARNING: This product can expose you to chemicals including:	WARNING: This product can expose you to chemicals including:
Diisononyl phthalate (DINP), which is known to the State of California to cause cancer, and	Diisononyl phthalate (DINP), which is known to the State of California to cause cancer, and
Di-isodecyl phthalate (DIDP), which is known to the State of California to cause birth defects or other reproductive harm.	Di-isodecyl phthalate (DIDP), which is known to the State of California to cause birth defects or other reproductive harm.
For more information go to www.p65warnings.ca.gov	For more information go to www.p65warnings.ca.gov

Contractual warranty

Warranty period	18 months

Dimensions

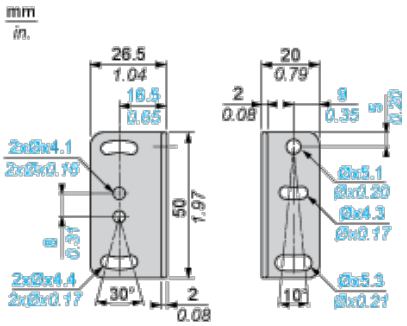

The information provided in this documentation contains general descriptions and/or technical characteristics of the performance of the products contained herein.
This documentation is not intended as a substitute for and is not to be used for determining suitability or reliability of these products for specific user applications.
It is the duty of any such user or integrator to perform the appropriate and complete risk analysis, evaluation and testing of the products with respect to the relevant specific application or use thereof.
Neither Schneider Electric Industries SAS nor any of its affiliates or subsidiaries shall be responsible or liable for misuse of the information contained herein.