REV	DATE	DESCRIPTION
NC	02/12/01	INITIAL RELEASE

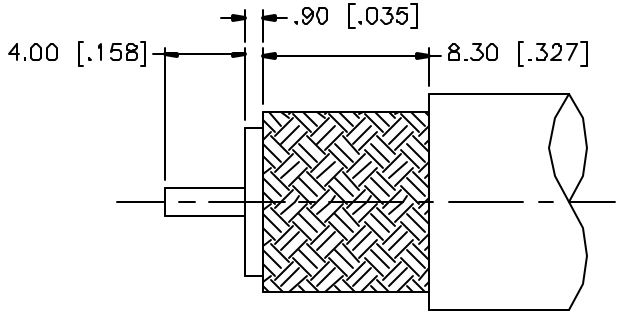

RECOMMENDED CABLE
STRIPPING DIMENSIONS

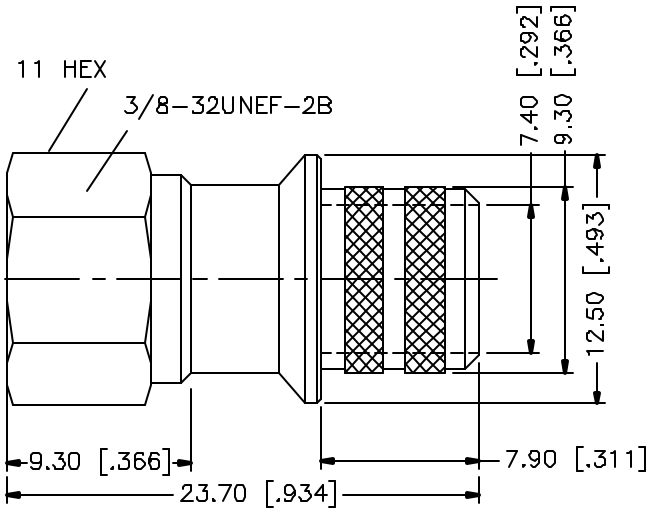

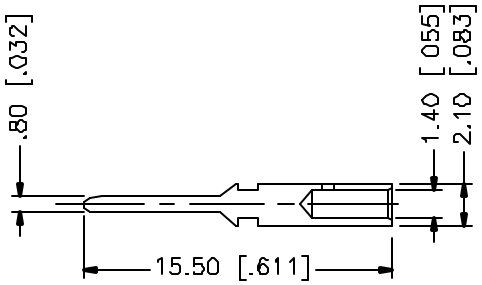

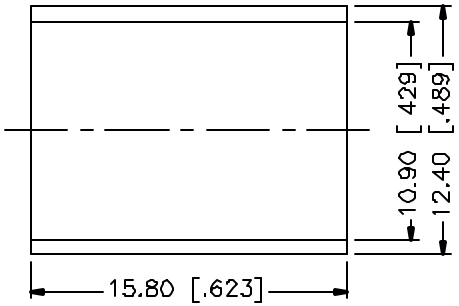

CRIMP NOTES:

1. CRIMPED FERRULE
   HEX CRIMP SIZE .429"
2. CRIMPED CONTACT PIN
   HEX CRIMP SIZE .068"

	DESCRIPTION	MATERIAL	FINISH
8			
7			
6			
5	FERRULE	BRASS	NICKEL
4	BARREL	BRASS	NICKEL
3	CONTACT PIN	BRASS	GOLD
2	INSULATOR	DELRIN	NATURAL
1	BODY	BRASS	NICKEL

UNLESS OTHERWISE SPECIFIED DIMENSIONS ARE IN MILLIMETERS

DIMENSIONS IN [ ] ARE IN INCHES FOR CUSTOMER REFERANCE ONLY

UNLESS OTHERWISE SPECIFIED TOLERANCES FOR MILLIMETERS ARE

0.5–6 = ± 0.2
6–30 = ± 0.4
30–120 = ± 0.6
120–315 = ± 1
315–1000 = ± 1.6
1000–2000 = ± 2.4

DO NOT SCALE DRAWING

APPROVALS		DATE
DRAWN	G.R.S.	02/12/01
CHECKED		
ISSUED		

Connector Corporation

TITLE: F CRIMP PLUG (FOR RG-11 CABLE)

SIZE	FSCM NO.	DWG. NO.	REV.
A	99001	222175.DWG	NC

SCALE	NA	PART NO.	222175	SHEET	1 OF 1