REV.	DATE	DESCRIPTION
A	08/08/02	UPDATE BARREL DIAMETER

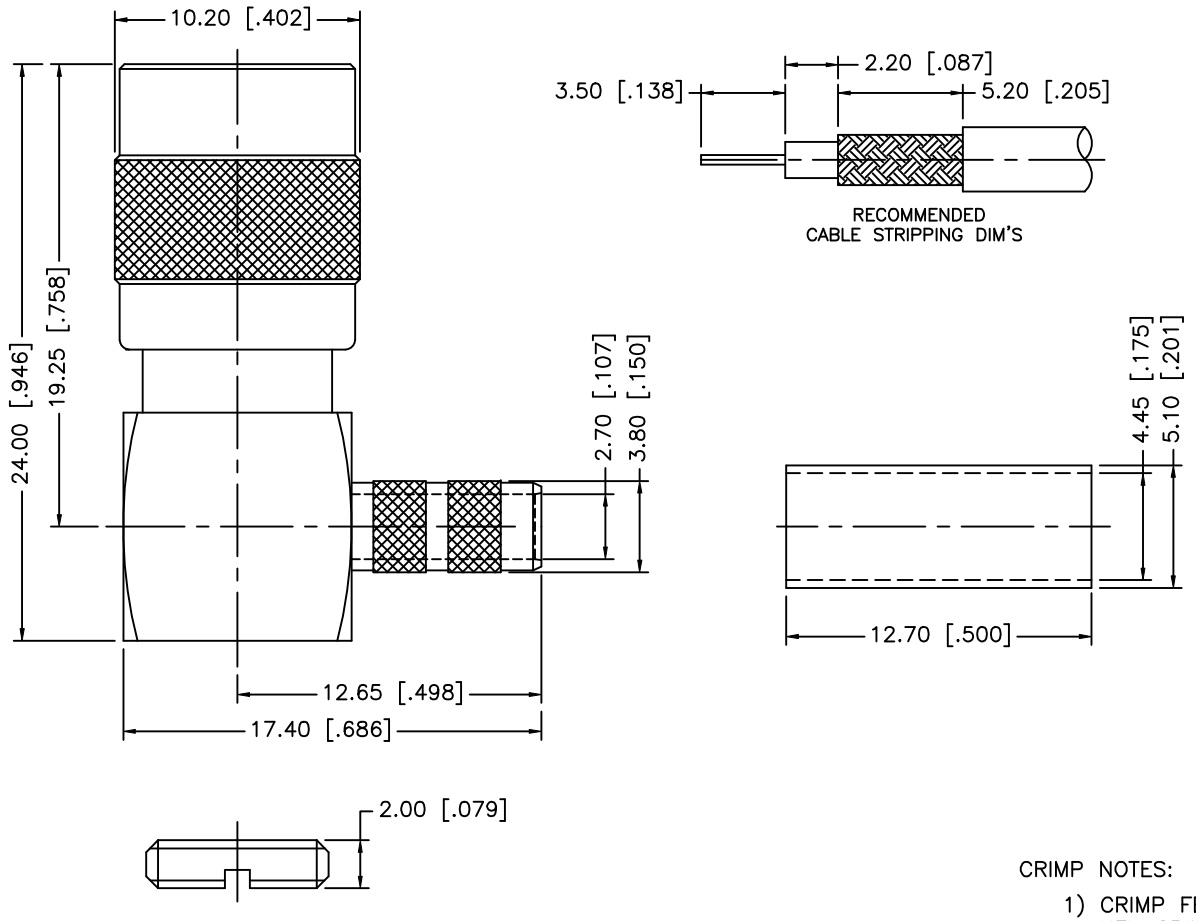

CRIMP NOTES:

1) CRIMP FERRULE
   HEX CRIMP SIZE .178"
2) CONTACT PIN TO SOLDER

8			
7			
6			
5	FERRULE	BRASS	NICKEL
4	RETAINER RING	BER. COPPER	NATURAL
3	CONTACT PIN	BER. COPPER	GOLD
2	INSULATOR	TEFLON	NATURAL
1	BODY/SHELL	BRASS	NICKEL
	DESCRIPTION	MATERIAL	FINISH

UNLESS OTHERWISE SPECIFIED DIMENSIONS ARE IN MILLIMETERS

DIMENSIONS IN [ ] ARE IN INCHES FOR CUSTOMER REFERANCE ONLY

UNLESS OTHERWISE SPECIFIED TOLERANCES FOR INCHES ARE:

.XXX = ± 0.005"
.XX = ± 0.010"
.X = ± 0.020"

DO NOT SCALE DRAWING

APPROVALS		DATE
DRAWN	G.R.S.	08/08/02
CHECKED		
ISSUED		

Amphenol - Connex
CONNECTOR CORPORATION

TITLE: SMB R/A POSITION LOCK CRIMP PLUG (FOR RG-180B/U, 195/U CABLE)

SIZE	FSCM NO.	DWG. NO.	REV.
A	99001	142292.DWG	A

SCALE	PART NO.	SHEET
NA	142292	1 OF 1