THIS DRAWING IS UNPUBLISHED. RELEASED FOR PUBLICATION ,1997
© COPYRIGHT 1997 BY - ALL RIGHTS RESERVED.

REVISIONS

P	LTR	DESCRIPTION	DATE	DWN	APVD
	A6	REVISED PER ECR-16-016780	21AUG2017	NG	MKD

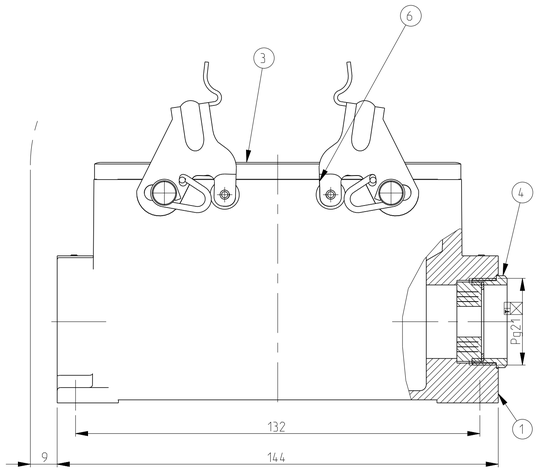

PN 1-1

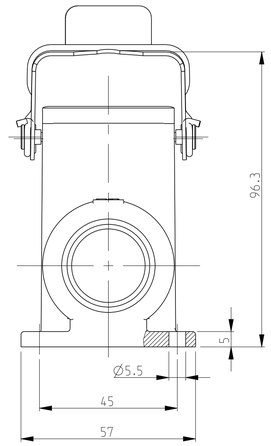

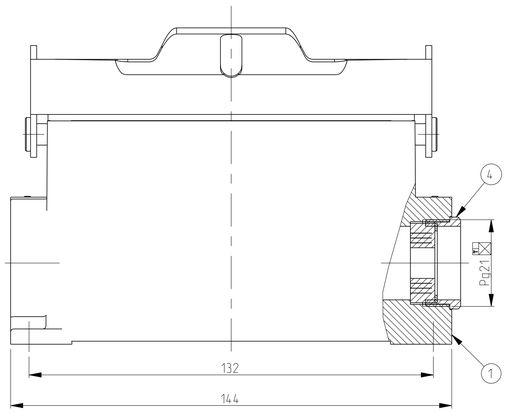

PN 1-2

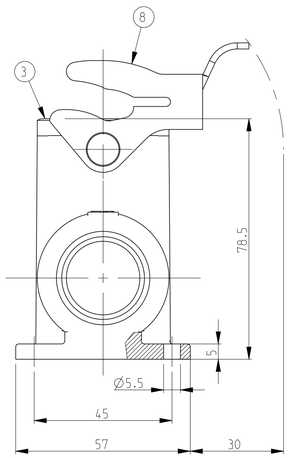

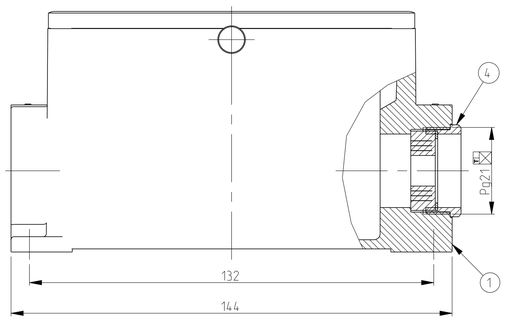

PN 1-8

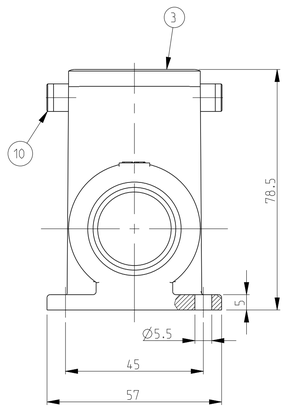

NOTES.

1 Material:Housing:Aluminium Diecasting Alloy

2 Surface:Varnish grey

3 Varnish on the inside not necessary

4 Packaging
Quantity 5 Pieces in a box

5 OBSOLETE PARTS: OBSOLETE CIS STREAMLINING PER D.RENAUD/D.SINISI

PN 1-1

SCALE 1:2

PN 1-2

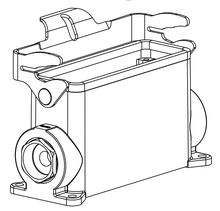

SCALE 1:2

PN 1-8

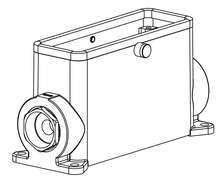

SCALE 1:2

OBSOLETE 5	OBSOLETE 5	OBSOLETE 5		OBSOLETE 5	OBSOLETE 5		DESCRIPTION	MATERIAL	SURFACE	COLOR	ITEM NO	REMARKS
2							ZB-Clip bolt	Stainless steel			11	
	2						ZB-Clip bolt	Steel	Zinc plated	Blue	10	
		1					LB-Side clip	Stainless steel			9	
			1				LB-Side clip	Steel	Zinc plated	Blue	8	
				2			VS-Locking clip	Stainless steel			7	
					2		VS-Locking clip	Steel	Zinc plated	Blue	6	
1		1		1			Gland fitting Pg21	Brass	Nickel plated		5	
	1		1		1		Cable connection round Pg21	Brass	Nickel plated		4	
1	1	1	1	1	1		Profile seal	Neoprene		Black	3	
		1		1			Surface mounted housing side entry HD.64.Pg1.1.21	Aluminium	Aluminium oxide	Black	2	
	1		1		1		Surface mounted housing side entry HD.64.Pg1.1.21	Aluminium		Grey	1	
2-8	1-8	2-2	1-2	2-1	1-1		ORDERING TEXT					
							~~HD.64.SG-VS.1.21~~					
							~~HD-K.64.SG-VS.1.21~~					
							HD.64.SG-LB.1.21					
							~~HD-K.64.SG-LB.1.21~~					
							~~HD-Z.64.SG-ZVGR.1.21~~					
							~~HD-K/Z.64.SG-ZVGR.1.21~~					

THIS DRAWING IS A CONTROLLED DOCUMENT.

DIMENSIONS: mm

TOLERANCES UNLESS OTHERWISE SPECIFIED: A.ISO 8015 B.ISO 14405-1 C.ISO 1101:2013
0 PLC ±
1 PLC ±
2 PLC ±
3 PLC ±
4 PLC ±
ANGLES ±

MATERIAL

FINISH - -

DWN Schweiger 17.07.1997
CHK Kramer 26.06.98
APVD - -
PRODUCT SPEC 108-74003
APPLICATION SPEC 114-74001
WEIGHT -

TE Connectivity

NAME Surface mounted housing side entry HD.64.1.21

SIZE	CAGE CODE	DRAWING NO	RESTRICTED TO
A1	00779	C-1103345	-

CUSTOMER DRAWING SCALE 1:1 SHEET 1 OF 1 REV A6