W40S01-04

SDRAM Buffer - 4 DIMM

Features

- **Eighteen skew controlled CMOS outputs (SDRAM0:17)**
- **Supports four SDRAM DIMMs**
- **Ideal for high-performance systems designed around Intel®'s 440BX chip set**
- **I^2C serial configuration interface**
- **Output skew between any two outputs is less than 250 ps**
- **1 to 5 ns propagation delay**
- **DC to 133-MHz operation**
- **Single 3.3V supply voltage**
- **Low power CMOS design packaged in a 48-pin SSOP (Small Shrink Outline Package)**

Overview

The Cypress W40S01-04 is a low-voltage, eighteen-output signal buffer. Output buffer impedance is approximately 15Ω which is ideal for driving SDRAM DIMMs.

Key Specifications

Supply Voltages: ..... V_{DDQ3} = 3.3V±5%
Operating Temperature: ..... 0°C to +70°C
Input Threshold: ..... 1.5V typical
Maximum Input Voltage: ..... V_{DDQ3} + 0.5V
Input Frequency: ..... 0 to 133 MHz
BUF_IN to SDRAM0:17 Propagation Delay: ..... 1.0 to 5.0 ns
Output Edge Rate: ..... ≥1.5 V/ns
Output Skew: ..... ±250 ps
Output Duty Cycle: ..... 45/55% worst case
Output Impedance: ..... 15 ohms typical
Output Type: ..... CMOS rail-to-rail
Part to Part Skew: ..... 700 ps

Block Diagram

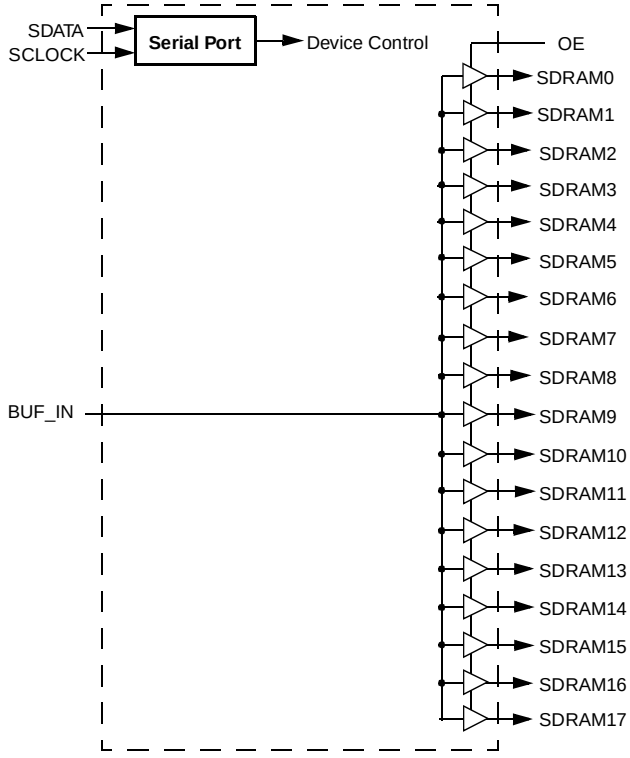

Pin Configuration

SSOP

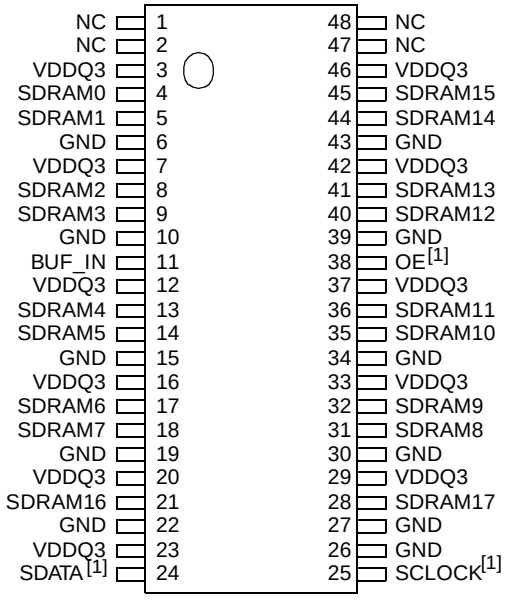

Note:
1. Internal pull-up resistor of 250K on SDATA, SCLOCK, and OE inputs (not CMOS level).

Intel is a registered trademark of Intel Corporation.

Pin Definitions

Pin Name	Pin No.	Pin Type	Pin Description
SDRAM0:17	4, 5, 8, 9, 13, 14, 17, 18, 21, 28, 31, 32, 35, 36, 40, 41, 44, 45	O	***SDRAM Outputs:*** Provides buffered copy of BUF_IN. The propagation delay from a rising input edge to a rising output edge is 1 to 5 ns. All outputs are skew controlled to within ± 250 ps of each other.
BUF_IN	11	I	***Clock Input:*** This clock input has an input threshold voltage of 1.5V (typ).
SDATA	24	I/O	***I^2C Data Input:*** Data should be presented to this input as described in the I^2C section of this data sheet. Internal 250-kΩ pull-up resistor.
SCLOCK	25	I	***I^2C clock Input:*** The I^2C data clock should be presented to this input as described in the I^2C section of this data sheet. Internal 250-kΩ pull-up resistor.
VDDQ3	3, 7, 12, 16, 20, 23, 29, 33, 37, 42, 46	P	***Power Connection:*** Power supply for core logic and output buffers. Connected to 3.3V supply.
GND	6, 10, 15, 19, 22, 26, 27, 30, 34, 39, 43	G	***Ground Connection:*** Connect all ground pins to the common system ground plane.
OE	38	I	***Output Enable:*** Internal 250-kΩ pull-up resistor. Three-states outputs when LOW.
NC	1, 2, 47, 48	-	***No Connect:*** Do not connect.

Functional Description

Output Control Pins

Outputs three-stated when OE = 0, and toggle when OE = 1. Outputs are in phase with BUF_IN but are phase delayed by 1 to 5 ns. Outputs can also be controlled via the I^2C interface.

Output Drivers

The W40S01-04 output buffers are CMOS type which deliver a rail-to-rail (GND to V_{DD}) output voltage swing into a nominal capacitive load. Thus, output signaling is both TTL and CMOS level compatible. Nominal output buffer impedance is 15 ohms.

Operation

Data is written to the W40S01-04 in ten bytes of eight bits each. Bytes are written in the order shown in *Table 1*.

Table 1. Byte Writing Sequence

Byte Sequence	Byte Name	Bit Sequence	Byte Description
1	Slave Address	11010010	Commands the W40S01-04 to accept the bits in Data Bytes 0-6 for internal register configuration. Since other devices may exist on the same common serial data bus, it is necessary to have a specific slave address for each potential receiver. The slave receiver address for the W40S01-04 is 11010010. Register setting will not be made if the Slave Address is not correct (or is for an alternate slave receiver).
2	Command Code	Don't Care	Unused by the W40S01-04, therefore bit values are ignored (don't care). This byte must be included in the data write sequence to maintain proper byte allocation. The Command Code Byte is part of the standard serial communication protocol and may be used when writing to another addressed slave receiver on the serial data bus.
3	Byte Count	Don't Care	Unused by the W40S01-04, therefore bit values are ignored (don't care). This byte must be included in the data write sequence to maintain proper byte allocation. The Byte Count Byte is part of the standard serial communication protocol and may be used when writing to another addressed slave receiver on the serial data bus.
4	Data Byte 0	Refer to *Table 2*	The data bits in these bytes set internal W40S01-04 registers that control device operation. The data bits are only accepted when the Address Byte bit sequence is 11010010, as noted above. For description of bit control functions, refer to *Table 2*, Data Byte Serial Configuration Map.
5	Data Byte 1		
6	Data Byte 2		
7	Data Byte 3	Don't Care	Refer to Cypress clock drivers.
8	Data Byte 4		
9	Data Byte 5		
10	Data Byte 6		

Writing Data Bytes

Each bit in the data bytes control a particular device function. Bits are written MSB (most significant bit) first, which is bit 7.

Table 2 gives the bit formats for registers located in Data Bytes 0–6.

Table 2. Data Bytes 0–2 Serial Configuration Map[2]

Bit(s)	Affected Pin		Control Function	Bit Control	
	Pin No.	Pin Name		0	1
Data Byte 0 SDRAM Active/Inactive Register (1=Enable, 0=Disable)					
7	18	SDRAM7	Clock Output Disable	Low	Active
6	17	SDRAM6	Clock Output Disable	Low	Active
5	14	SDRAM5	Clock Output Disable	Low	Active
4	13	SDRAM4	Clock Output Disable	Low	Active
3	9	SDRAM3	Clock Output Disable	Low	Active
2	8	SDRAM2	Clock Output Disable	Low	Active
1	5	SDRAM1	Clock Output Disable	Low	Active
0	4	SDRAM0	Clock Output Disable	Low	Active
Data Byte 1 SDRAM Active/Inactive Register (1=Enable, 0=Disable)					
7	45	SDRAM15	Clock Output Disable	Low	Active
6	44	SDRAM14	Clock Output Disable	Low	Active
5	41	SDRAM13	Clock Output Disable	Low	Active
4	40	SDRAM12	Clock Output Disable	Low	Active
3	36	SDRAM11	Clock Output Disable	Low	Active
2	35	SDRAM10	Clock Output Disable	Low	Active
1	32	SDRAM9	Clock Output Disable	Low	Active
0	31	SDRAM8	Clock Output Disable	Low	Active
Data Byte 2 SDRAM Active/Inactive Register (1=Enable, 0=Disable)					
7	28	SDRAM17	Clock Output Disable	Low	Active
6	21	SDRAM16	Clock Output Disable	Low	Active
5	N/A	Reserved	(Reserved)	--	--
4	N/A	Reserved	(Reserved)	--	--
3	N/A	Reserved	(Reserved)	--	--
2	N/A	Reserved	(Reserved)	--	--
1	N/A	Reserved	(Reserved)	--	--
0	N/A	Reserved	(Reserved)	--	--

Note:
2. At power-up all SDRAM outputs are enabled and active. Program Reserved bits to 0.

How To Use the Serial Data Interface

Electrical Requirements

Figure 1 illustrates electrical characteristics for the serial interface bus used with the W40S01-04. Devices send data over the bus with an open drain logic output that can (a) pull the bus line LOW, or (b) let the bus default to logic 1. The pull-up resistor on the bus (both clock and data lines) establish a default logic 1. All bus devices generally have logic inputs to receive data.

Although the W40S01-04 is a receive-only device (no data write-back capability), it does transmit an “acknowledge” data pulse after each byte is received. Thus, the SDATA line can both transmit and receive data.

The pull-up resistor should be sized to meet the rise and fall times specified in AC parameters, taking into consideration total bus line capacitance.

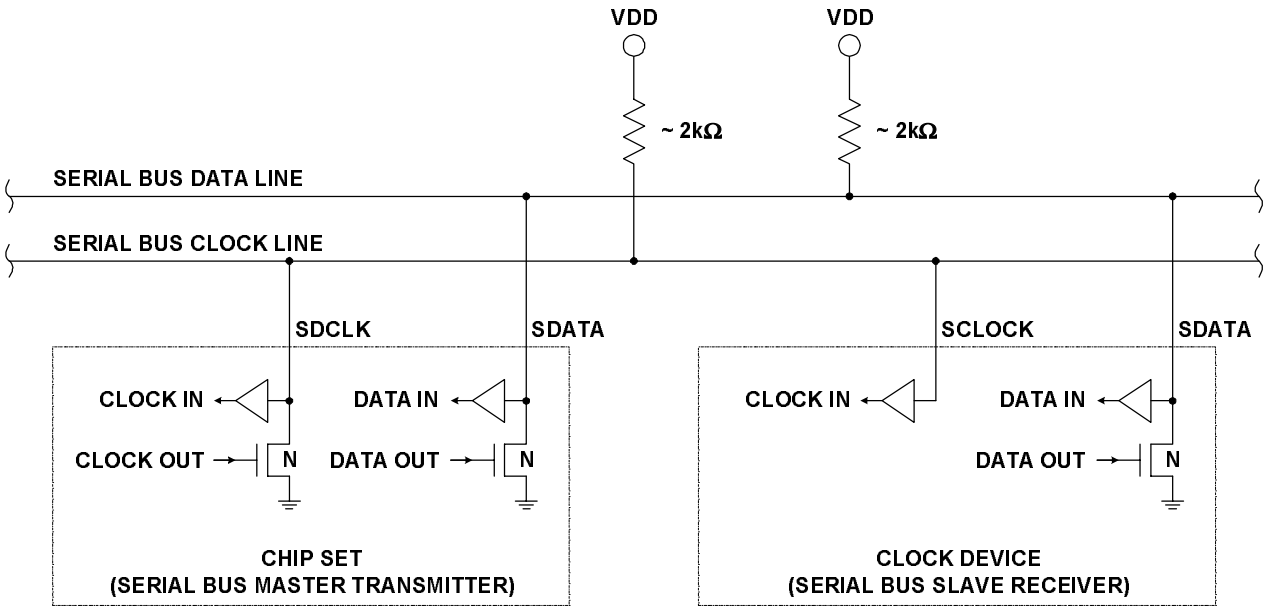

Figure 1. Serial Interface Bus Electrical Characteristics

Signaling Requirements

As shown in *Figure 2*, valid data bits are defined as stable logic 0 or 1 condition on the data line during a clock HIGH (logic 1) pulse. A transitioning data line during a clock HIGH pulse may be interpreted as a start or stop pulse (it will be interpreted as a start or stop pulse if the start/stop timing parameters are met).

A write sequence is initiated by a “start bit” as shown in *Figure 3*. A “stop bit” signifies that a transmission has ended.

As stated previously, the W40S01-04 sends an “acknowledge” pulse after receiving eight data bits in each byte as shown in *Figure 4*.

Sending Data to the W40S01-04

The device accepts data once it has detected a valid start bit and address byte sequence. Device functionality is changed upon the receipt of each data bit (registers are not double buffered). Partial transmission is allowed meaning that a transmission can be truncated as soon as the desired data bits are transmitted (remaining registers will be unmodified). Transmission is truncated with either a stop bit or new start bit (restart condition).

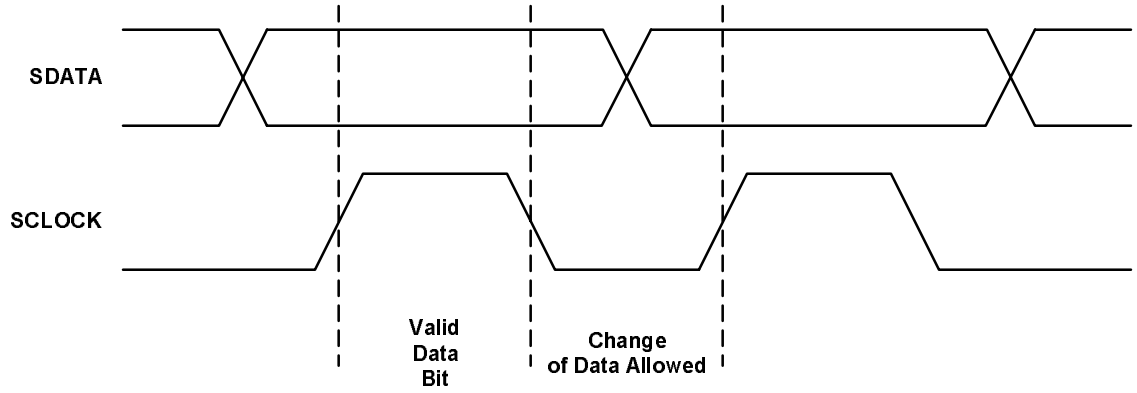

Figure 2. Serial Data Bus Valid Data Bit

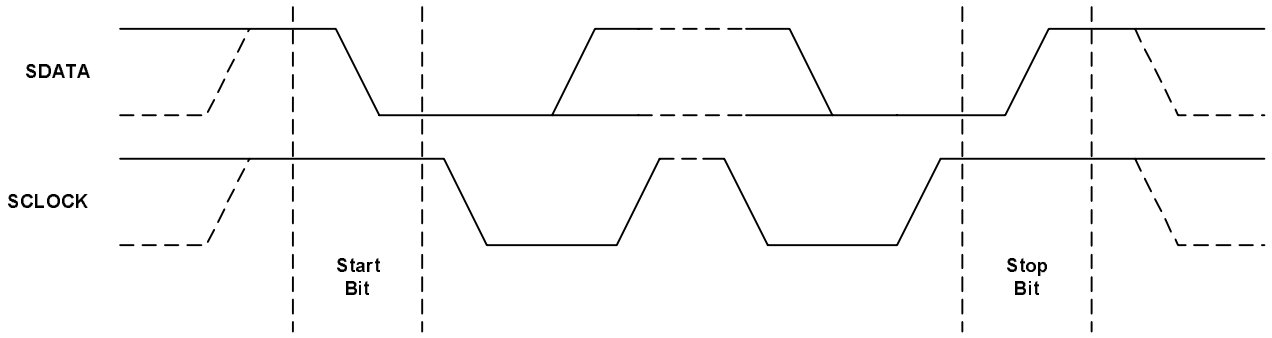

Figure 3. Serial Data Bus Start and Stop Bit

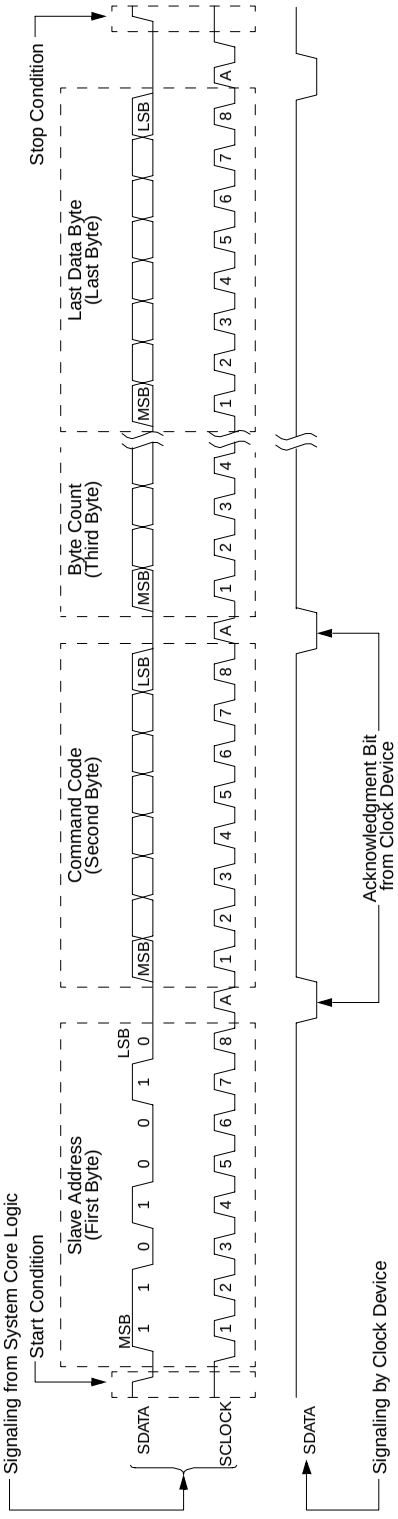

Figure 4. Serial Data Bus Write Sequence

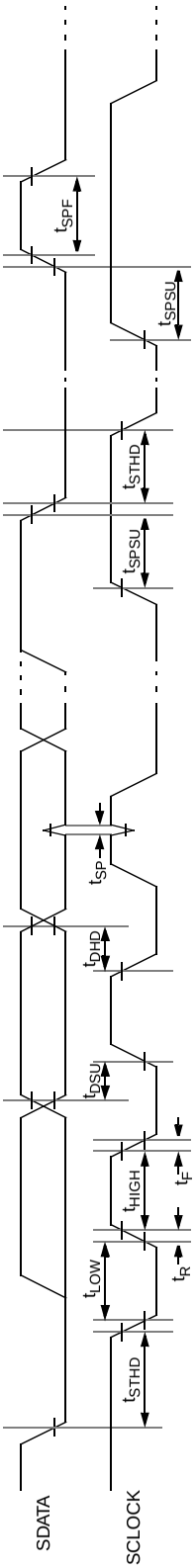

Figure 5. Serial Data Bus Timing Diagram

Absolute Maximum Ratings

Stresses greater than those listed in this table may cause permanent damage to the device. These represent a stress rating only. Operation of the device at these or any other conditions above those specified in the operating sections of this specification is not implied. Maximum conditions for extended periods may affect reliability

Parameter	Description	Rating	Unit
V_{DD}, V_{IN}	Voltage on any pin with respect to GND	–0.5 to +7.0	V
T_{STG}	Storage Temperature	–65 to +150	°C
T_A	Operating Temperature	0 to +70	°C
T_B	Ambient Temperature under Bias	–55 to +125	°C

DC Electrical Characteristics: T_A = 0°C to +70°C, V_{DDQ3} = 3.3V±5%

Parameter	Description	Test Condition/ Comments	Min	Typ	Max	Unit
I_{DD}	3.3V Supply Current	BUF_IN = 100 MHz		320		mA
$I_{DD\ Tristate}$	3.3V Supply Current in Three-state	BUF_IN = 100 MHz		5		mA
Logic Inputs (BUF_IN, OE, SCLOCK, SDATA)						
V_{IL}	Input Low Voltage		GND–0.3		0.8	V
V_{IH}	Input High Voltage		2.0		V_{DDQ3}+0.5	V
I_{ILEAK}	Input Leakage Current, BUF_IN		–5		+5	µA
I_{ILEAK}	Input Leakage Current[3]		–20		+5	µA
Logic Outputs (SDRAM0:17)[4]						
V_{OL}	Output Low Voltage	I_{OL} = 1 mA			50	mV
V_{OH}	Output High Voltage	I_{OH} = –1 mA	3.1			V
I_{OL}	Output Low Current	V_{OL} = 1.5V	70	110	185	mA
I_{OH}	Output High Current	V_{OH} = 1.5V	65	100	160	mA
Pin Capacitance/Inductance						
C_{IN}	Input Pin Capacitance (Except BUF_IN)				5	pF
C_{OUT}	Output Pin Capacitance				6	pF
L_{IN}	Input Pin Inductance				7	nH

Notes:
3. OE, SCLOCK, and SDATA logic pins have a 250-kΩ internal pull-up resistor (not CMOS level).
4. Outputs loaded by 6" 60Ω transmission lines with 20-pF capacitors.

AC Electrical Characteristics: T_A = 0°C to +70°C, V_{DDQ3} = 3.3V±5% (Lump Capacitance Test Load = 30 pF)

Parameter	Description	Test Condition	Min	Typ	Max	Unit
f_{IN}	Input Frequency		0		133	MHz
t_R	Output Rise Edge Rate	Measured from 0.4V to 2.4V	1.5		4.0	V/ns
t_F	Output Fall Edge Rate	Measured from 2.4V to 0.4V	1.5		4.0	V/ns
t_{SR}	Output Skew, Rising Edges				250	ps
t_{SF}	Output Skew, Falling Edges				250	ps
t_{EN}	Output Enable Time		1.0		8.0	ns
t_{DIS}	Output Disable Time		1.0		8.0	ns
t_{PR}	Rising Edge Propagation Delay		1.0		5.0	ns
t_{PF}	Falling Edge Propagation Delay		1.0		5.0	ns
t_D	Duty Cycle	Measured at 1.5V	45		55	%
Z_o	AC Output Impedance			15		Ω
T_{SPP}	Part to Part Skew				700	ps

Ordering Information

Ordering Code	Freq. Mask Code	Package Name	Package Type
W40S01	04	H	48-pin SSOP (300 mils)

Document #: 38-00811

Package Diagram

48-Pin Shrink Small Outline Package (SSOP, 0.300 inch)

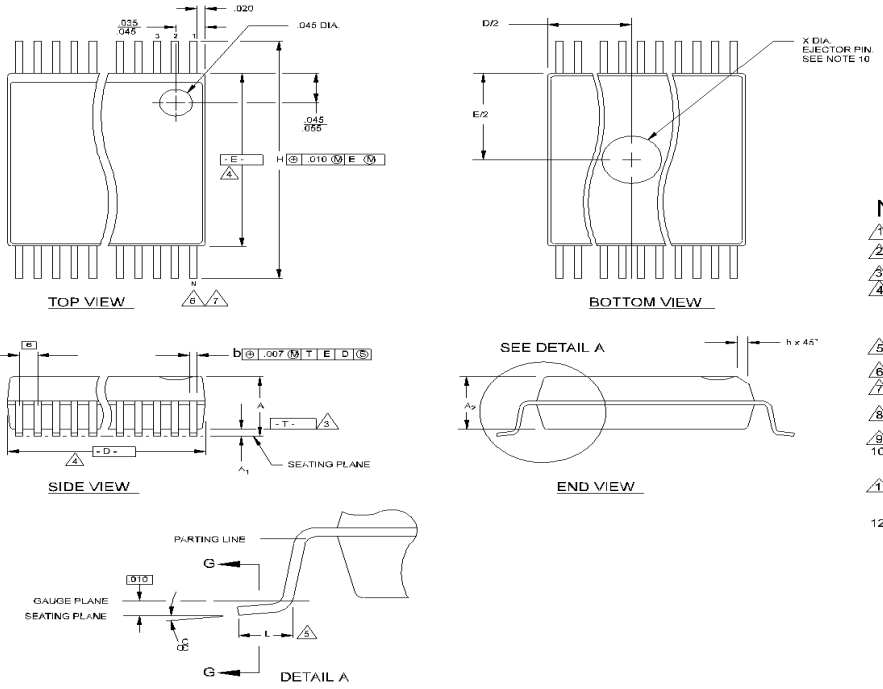

NOTES:

1. MAXIMUM DIE THICKNESS ALLOWABLE IS .025.
2. DIMENSIONING & TOLERANCING PER ANSI Y14.5M - 1982.
3. "T" IS A REFERENCE DATUM.
4. "D" & "E" ARE REFERENCE DATUMS AND DO NOT INCLUDE MOLD FLASH OR PROTRUSIONS, BUT DOES INCLUDE MOLD MISMATCH AND ARE MEASURED AT THE MOLD PARTING LINE. MOLD FLASH OR PROTRUSIONS SHALL NOT EXCEED .006 INCHES PER SIDE.
5. "L" IS THE LENGTH OF TERMINAL FOR SOLDERING TO A SUBSTRATE.
6. "N" IS THE NUMBER OF TERMINAL POSITIONS.
7. TERMINAL POSITIONS ARE SHOWN FOR REFERENCE ONLY.
8. FORMED LEADS SHALL BE PLANAR WITH RESPECT TO ONE ANOTHER WITHIN .003 INCHES AT SEATING PLANE.
9. CONTROLLING DIMENSION: INCHES.
10. COUNTRY OF ORIGIN LOCATION AND EJECTOR PIN ON PACKAGE BOTTOM IS OPTIONAL AND DEPENDS ON ASSEMBLY LOCATION.
11. THESE DIMENSIONS APPLY TO THE FLAT SECTION OF THE LEAD BETWEEN .005 INCHES AND .010 INCHES FROM THE LEAD TIPS.
12. THIS PART IS COMPLIANT WITH JEDEC SPECIFICATION MO-118, VARIATIONS AA, AB, EXCEPT CHAMFER DIMENSION h. JEDEC SPECIFICATION FOR h IS .015"/.025".

SYMBOL	COMMON DIMENSIONS			NOTE	NOTE	4			6
	MIN.	NOM.	MAX.		VARIATIONS	D			N
A	.095	.102	.110			MIN.	NOM.	MAX.	
A_1	.008	.012	.016		AA	.620	.625	.630	48
A_2	.088	.090	.092		AB	.720	.725	.730	56
b	.008	.010	.0135						
b_1	.008	.010	.012						
c	.005	-	.010						
c_1	.005	.006	.0085						
D	SEE VARIATIONS			4					
E	.292	.296	.299						
e	.025 BSC								
H	.400	.406	.410						
h	.010	.013	.016						
L	.024	.032	.040						
N	SEE VARIATIONS			6					
X	.085	.093	.100	10					
α	0°	5°	8°						

THIS TABLE IN INCHES

SYMBOL	COMMON DIMENSIONS			NOTE	NOTE	4			6
	MIN.	NOM.	MAX.		VARIATIONS	D			N
A	2.41	2.59	2.79			MIN.	NOM.	MAX.	
A_1	0.20	0.31	0.41		AA	15.75	15.88	16.00	48
A_2	2.24	2.29	2.34		AB	18.29	18.42	18.54	56
b	0.203	0.254	0.343						
b_1	0.203	0.254	0.305						
c	0.127	-	0.254						
c_1	0.127	0.152	0.216						
D	SEE VARIATIONS			4					
E	7.42	7.52	7.59						
e	0.635 BSC								
H	10.16	10.31	10.41						
h	0.25	0.33	0.41						
L	0.61	0.81	1.02						
N	SEE VARIATIONS			6					
X	2.16	2.36	2.54	10					
α	0°	5°	8°						

THIS TABLE IN MILLIMETERS

© Cypress Semiconductor Corporation, 1999. The information contained herein is subject to change without notice. Cypress Semiconductor Corporation assumes no responsibility for the use of any circuitry other than circuitry embodied in a Cypress Semiconductor product. Nor does it convey or imply any license under patent or other rights. Cypress Semiconductor does not authorize its products for use as critical components in life-support systems where a malfunction or failure may reasonably be expected to result in significant injury to the user. The inclusion of Cypress Semiconductor products in life-support systems application implies that the manufacturer assumes all risk of such use and in doing so indemnifies Cypress Semiconductor against all charges.