THIS DRAWING IS UNPUBLISHED. RELEASED FOR PUBLICATION -,- .
© COPYRIGHT - By - ALL RIGHTS RESERVED.

LOC	DIST
GP	00

REVISIONS

P	LTR	DESCRIPTION	DATE	DWN	APVD
	E1	REVISED PER ECO-11-005033	23MAR11	RK	HMR

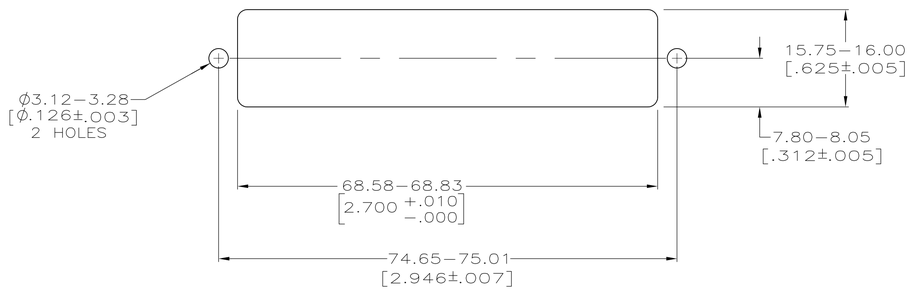

SUGGESTED REAR PANEL MOUNTING CUTOUT DIMENSIONS 4
SCALE 2:1

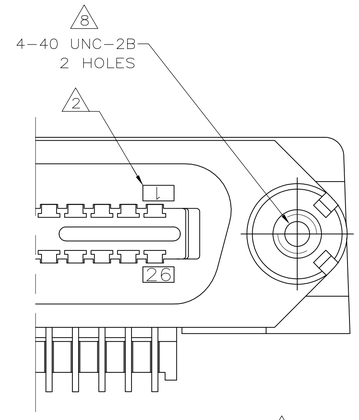

DETAIL A 6
STANDARD ORIENTATION

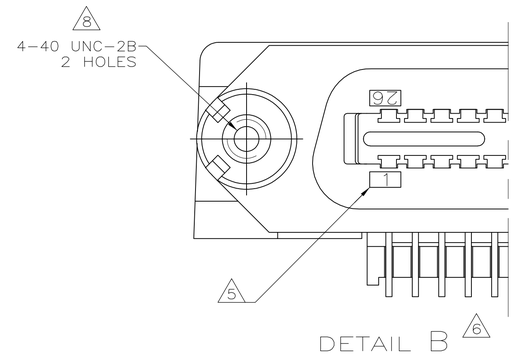

DETAIL B 6
REVERSE ORIENTATION

1. MATERIAL: HOUSING, BRACKET, PLATE & COMB – THERMOPLASTIC, BLACK, 94V–0 RATED. TERMINALS– HIGH STRENGTH COPPER ALLOY PLATED WITH EITHER 0.76µm [.000030] MIN GOLD PLATE OR GOLD FLASH OVER PALLADIUM NICKEL PLATE, 0.76µm [.000030] MIN TOTAL ON MATING SURFACE. 3.05µm [.000120] MIN TIN ON TAILS. ALL OVER 1.27µm [.000050] MIN NICKEL UNDERPLATE OVER ENTIRE TERMINAL. THREADED INSERT– #4–40 UNC, BRIGHT ZINC PLATED BRASS.
2. TERMINAL 1 IS LOCATED IN THIS ROW FOR STANDARD ORIENTATION, 5552725–1, –2, –5 & –7.
3. TERMINAL SUPPORT PLATE CLEARANCE FOR TERMINAL STRAIN RELIEF AND FLUX REMOVAL.
4. MAXIMUM PANEL THICKNESS: 1.57[.062].
5. TERMINAL 1 IS LOCATED IN THIS ROW FOR REVERSE OREINTATION, 5552725–3 AND –6 ONLY.
6. DETAILS "A" AND "B" ARE VIEWED FROM MATING SIDE OF RECEPTACLE ASSEMBLY.
7. FOR USE WITH A NO.4 BT TYPE SELF–TAPPING SCREW.
8. 5552725–1,–2 AND –3 ARE TAPPED 4–40; –5,–6 & –7 USE 4–40 THREADED INSERTS.
9. INSERT SHALL WITHSTAND 8 INCH–POUNDS OF TORQUE WITHOUT CRACKING HOUSING OR LOOSENING.

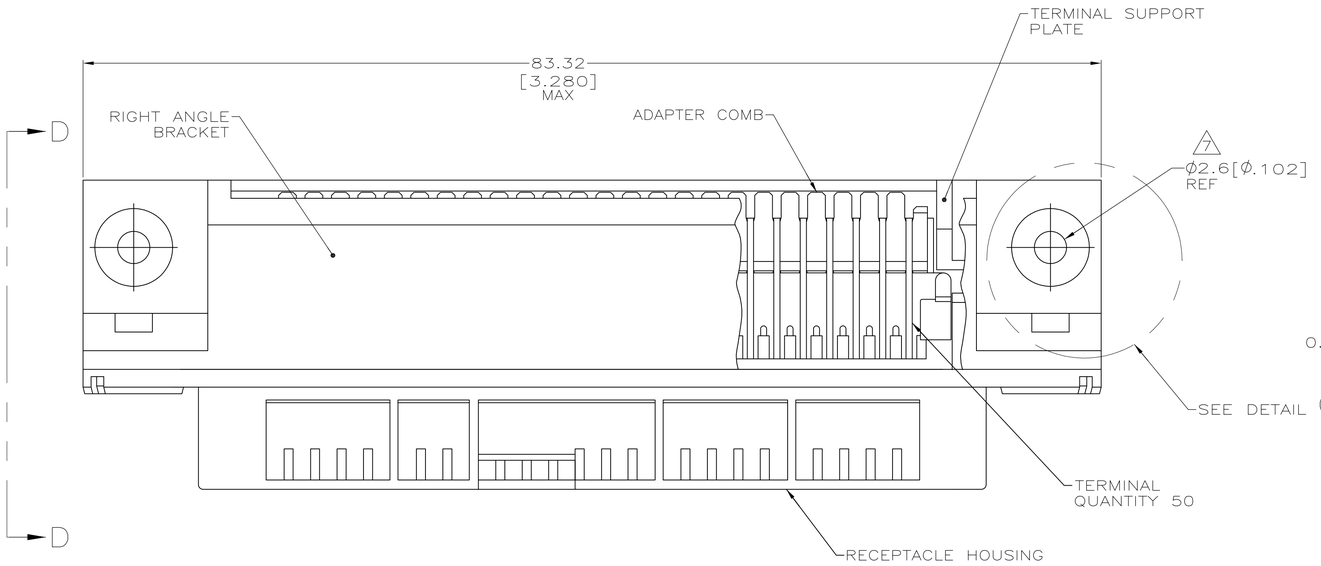

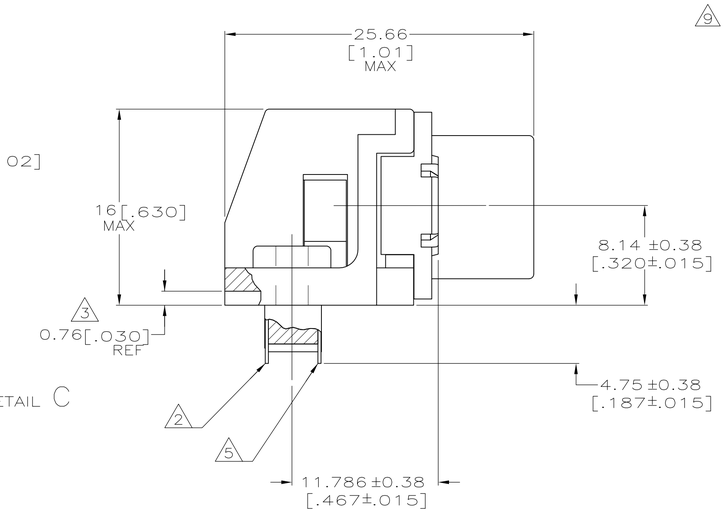

VIEW D–D
ROTATED 90° CCW

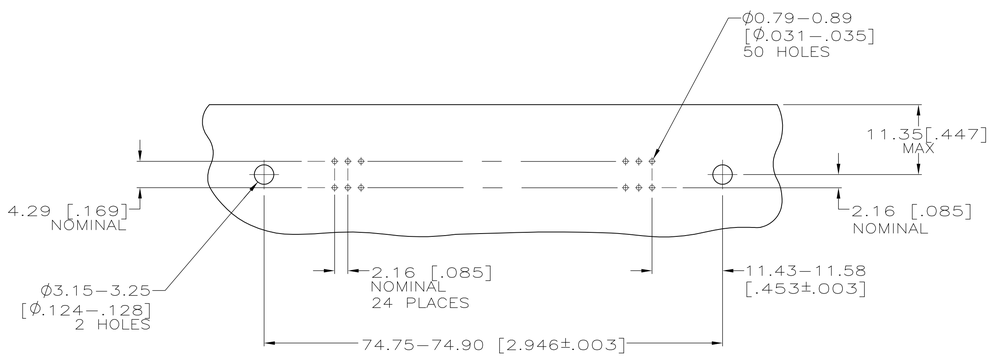

SUGGESTED PRINTED CIRCUIT BOARD MOUNTING DIMENSIONS
SCALE 2:1

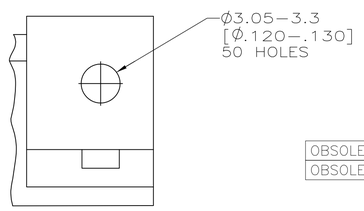

DETAIL C
(THRU–BOLT)

	8 9	THREADED INSERT	THRU–BOLT(SEE DETAIL C)	SEE DETAIL A 2	5552725–7
OBSOLETE	8 9	THREADED INSERT	7 SELF–TAPPING	SEE DETAIL B 5	5552725–6
OBSOLETE	8 9	THREADED INSERT	7 SELF–TAPPING	SEE DETAIL A 2	5552725–5
		TAPPED HOLE 8	SELF–TAPPING 7	SEE DETAIL B 5	5552725–3
		TAPPED HOLE 8	THRU–BOLT(SEE DETAIL C)	SEE DETAIL A 2	5552725–2
		TAPPED HOLE 8	SELF–TAPPING 7		5552725–1
		THREAD TYPE	TYPE OF MOUNTING	DESCRIPTION	PART NUMBER

THIS DRAWING IS A CONTROLLED DOCUMENT.

DIMENSIONS: mm [INCHES]

TOLERANCES UNLESS OTHERWISE SPECIFIED:
0 PLC ± –
1 PLC ± –
2 PLC ± –
3 PLC ± 0.13[.005]
4 PLC ± –
ANGLES ± –

MATERIAL 1
FINISH 1

DWN 18 AUG 97 DL DRUMMOND
CHK 25 AUG 97 DL DRUMMOND
APVD 25 AUG 97 R FLAHERTY
PRODUCT SPEC –
APPLICATION SPEC –
WEIGHT –

TE Connectivity

NAME: RECEPTACLE ASSEMBLY, 50 POSITION, RIGHT ANGLE, SELF TAPPING, CHAMP®

SIZE	CAGE CODE	DRAWING NO	RESTRICTED TO
A1	00779	C–5552725	

CUSTOMER DRAWING | SCALE 4:1 | SHEET 1 OF 1 | REV E1

4805 (3/11)