REV	ECN NO	REVISIONS	DRN	CKD	APP	DATE
A	——	NEW RELEASE	SM			

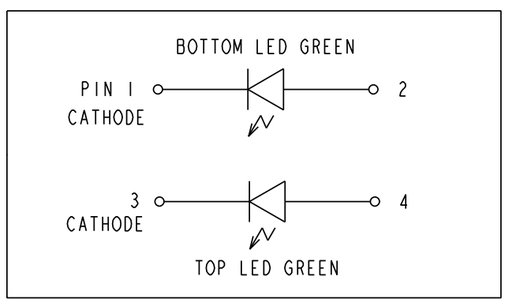

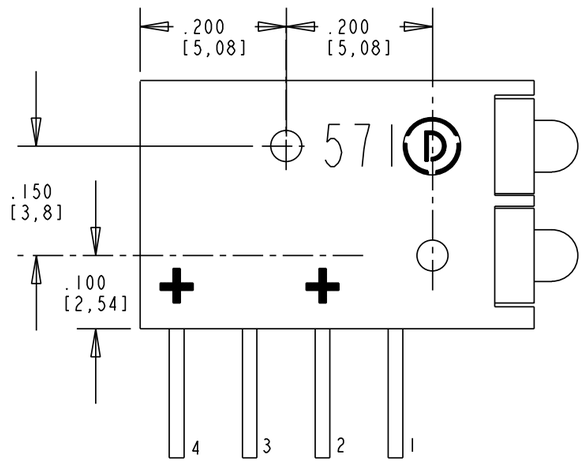

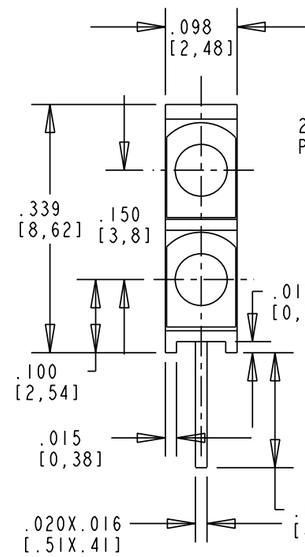

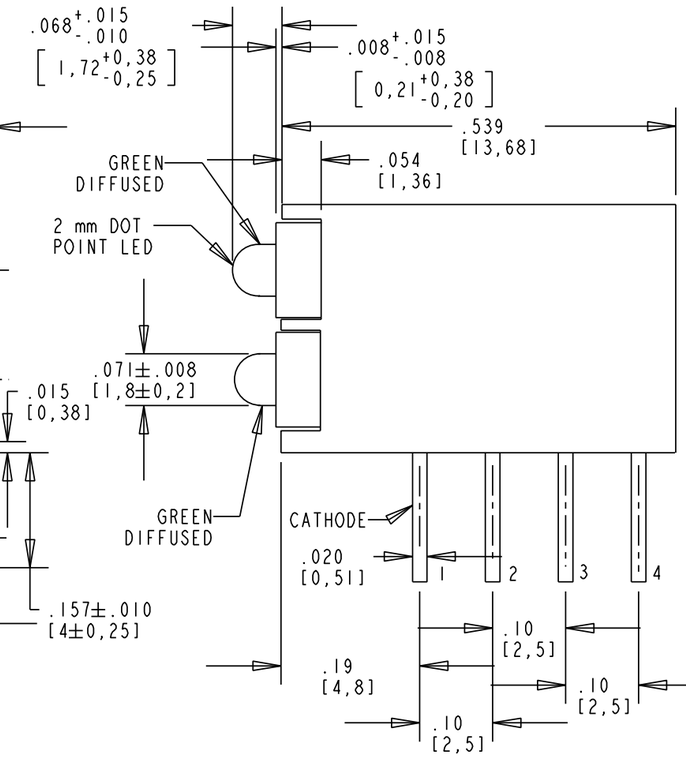

OPERATING CHARACTERISTICS AT 25°C AMBIENT						
CHARACTERISTICS	COLOR	MIN	TYP	MAX	UNITS	TEST CONDITIONS
LUMINOUS INTENSITY	GREEN	5	10		mcd	I_F = 10 mA
FORWARD VOLTAGE	GREEN		2.2	2.5	V	I_F = 20 mA
DOMINANT WAVELENGTH	GREEN		568		nm	
PEAK EMISSION WAVELENGTH	GREEN		565		nm	
VIEWING ANGLE 2θ1/2	GREEN		70		Degree	
CAPACITANCE	GREEN		20		pF	V_F = 0 V, f = 1 MHz

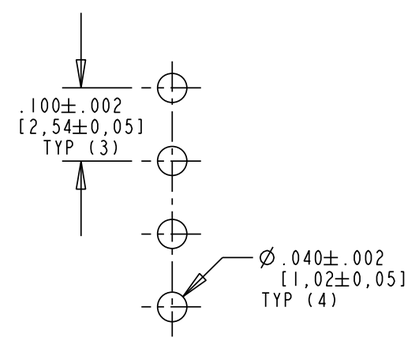

RECOMMENDED PC BOARD HOLE PATTERN

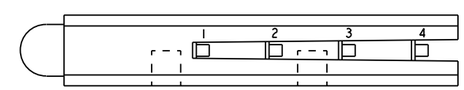

RoHS Compliant 571-0122-809F 2mm G/G CBI

Part Numbers with the "F" suffix ending are RoHS Compliant. Packaging is marked with "RoHS Compliant" label or equivalent markings.
Parts can be wave soldered, dip soldered or hand soldered using typical lead-free soldering process with max 260°C temp. for 5 sec.

ATTENTION:
OBSERVE PRECAUTIONS FOR HANDLING ELECTROSTATIC SENSITIVE DEVICES

ABSOLUTE MAXIMUM RATING AT 25°C AMBIENT	GREEN	UNITS
POWER DISSIPATION	105	mW
FORWARD CURRENT	25	mA
DERATING LINEAR FROM 25 °C	.33	mA/°C
REVERSE VOLTAGE	5	V
LEAD SOLDERING TEMPERATURE, 5 SEC., 1/16" FROM BODY	260	°C
OPERATING TEMPERATURE	-40 TO +85	°C
STORAGE TEMPERATURE	-40 TO +85	°C

NOTES:

1. LED LEAD DIMENSIONS ARE MEASURED AT HOUSING EXIT.
2. PIN NUMBERS FOR REFERENCE ONLY, DESIGNATION NON-EXISTENT ON PARTS
3. DIALIGHT PART NUMBER: 571-0122-809F.
4. THIS ASSEMBLY CONTAINS ELECTROSTATIC DISCHARGE SENSITIVE DEVICES (ESDS). MAINTAIN ALL PRECAUTIONARY MEASURES DURING ASSEMBLY, HANDLING AND STORAGE IN ACCORDANCE WITH IPC-A-610.

THIS DRAWING AND THE CONTENTS HEREIN ARE CONFIDENTIAL AND THE SOLE PROPERTY OF DIALIGHT. REPRODUCTION OF THIS DRAWING OR CONSTRUCTION OF ANY PARTS WITHIN THIS DRAWING ARE FORBIDDEN WITHOUT THE WRITTEN CONSENT OF DIALIGHT.

SCALE: DRAWING SCALE
ALL DIM'S IN: INCHES (MM)
TOLERANCES: UNLESS OTHERWISE SPECIFIED
FRACTIONS: ±1/64
DECIMALS (.XX): ±.01
DECIMALS (.XXX): ±.005
DECIMALS (.XXXX): ±.0005
ANGLES: ±1°

DRAWING NUMBER: C-17493
REV: A

TITLE: 2MM LED BI-LEVEL CBI G,G RoHS COMPLIANT

MATERIAL

FINISH:

Dialight
A Zhejiang Group Company
1501 ROUTE 34 SOUTH
FARMINGDALE, NJ 07727

FSCM 83330

SHEET 1 OF 1

FAMILY TABLE: