THIS DRAWING IS UNPUBLISHED. RELEASED FOR PUBLICATION -,- .
© COPYRIGHT 2011 BY TYCO ELECTRONICS CORPORATION. ALL RIGHTS RESERVED.

LOC	DIST
DW	—

REVISIONS

P	LTR	DESCRIPTION	DATE	DWN	APVD
	A1	REVISED (ECR-11-021390) DRAWING REDRAW & CHANGE TO TE LOGO	28MAR'12	E.L.	W.K.

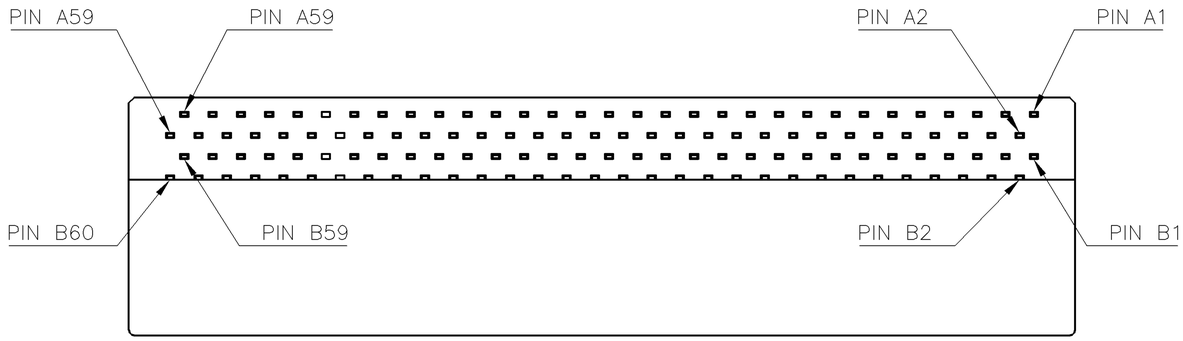

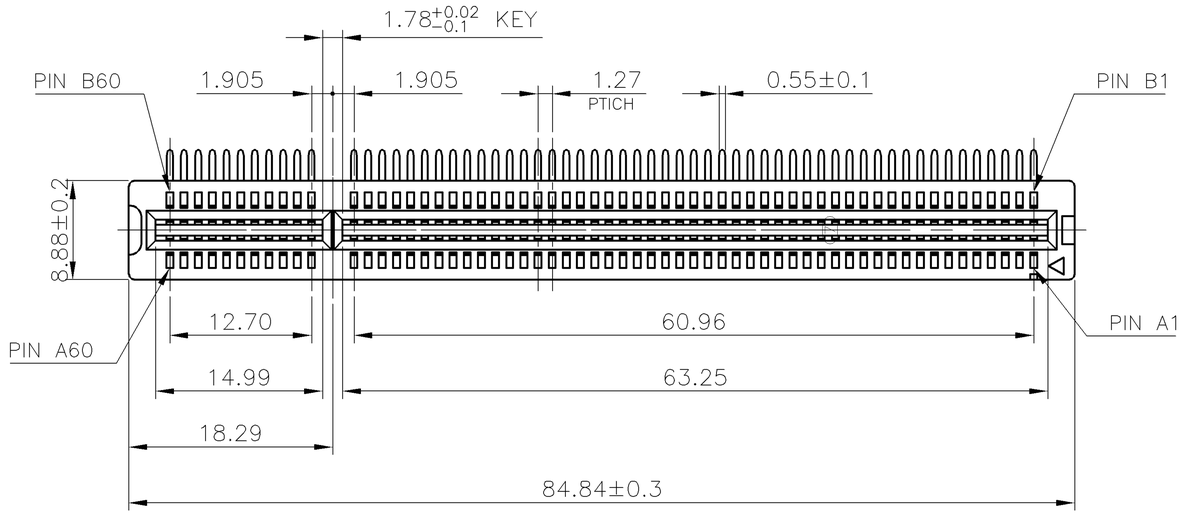

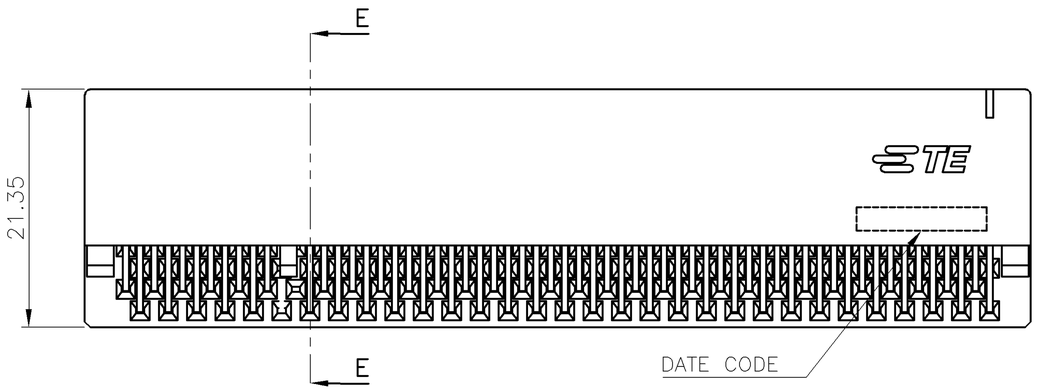

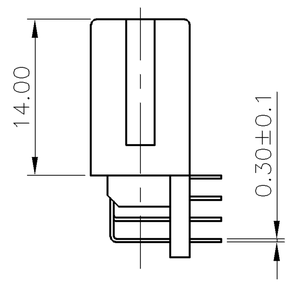

NOTES:

1. MATERIAL:
   1.1 HOUSING: PA66 WITH 30% G.F, UL94 V-0, COLOR: NATURAL.
   1.2 BACKBOARD: PA66 WITH 30% G.F, UL94 V-0, COLOR: NATURAL.
   1.3 CONTACT: PHOSPHOR BRONZE
2. FINISH:
   CONTACT:
   (SEE TABLE) GOLD PLATING ON CONTACT AREA.
   2.54um [100u"] MIN. BRIGHT-TIN PALTING ON SOLDER TAIL AREA.
   1.27um [50u"] MIN. NICKEL UNDERPLATING OVERALL.
3. RECOMMENDED P.C.B THICKNESS : 1.57mm
4. WAVE SOLDER CAPABLE TO 265°C
   PER TE SPEC. 109-202, CONDITION B.

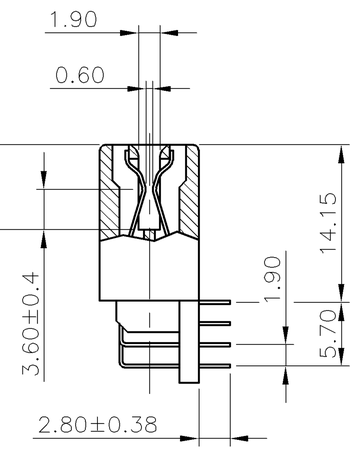

E-E
SCALE 1:1

	WEIGHT (g)	MIN. GOLD THICKNESS	PART NUMBER
	14.40	0.762um [30u"]	1775403-3
		0.254um [10u"]	1775403-2
OBSOLETED		~~0.0254um [1u"]~~	~~1775403-1~~

THIS DRAWING IS A CONTROLLED DOCUMENT.

DIMENSIONS: mm

TOLERANCES UNLESS OTHERWISE SPECIFIED:

0 PLC	± -
1 PLC	± 0.3
2 PLC	± 0.2
3 PLC	± 0.15
4 PLC	± -
ANGLES	± 3°

MATERIAL: SEE NOTE

FINISH: SEE NOTE

DWN J. LEE 17APR2006
CHK S. HOU 17APR2006
APVD W.J. KE 17APR2006
PRODUCT SPEC 108-57496
APPLICATION SPEC —
WEIGHT SEE TABLE
CUSTOMER DRAWING

TE Connectivity

NAME: 1.27mm PCI, CARD EDGE, 120 POS, R/A

SIZE	CAGE CODE	DRAWING NO	RESTRICTED TO
A3	00779	C-1775403	—

SCALE — SHEET 1 OF 3 REV A1

THIS DRAWING IS UNPUBLISHED. RELEASED FOR PUBLICATION -,- .
© COPYRIGHT 2011 BY TYCO ELECTRONICS CORPORATION. ALL RIGHTS RESERVED.

LOC	DIST
DW	—

REVISIONS

P	LTR	DESCRIPTION	DATE	DWN	APVD
		SEE SHEET 1.			

NOTES:
CHAMFER EDGE MUST BE FREE OF CUTTING BURRS

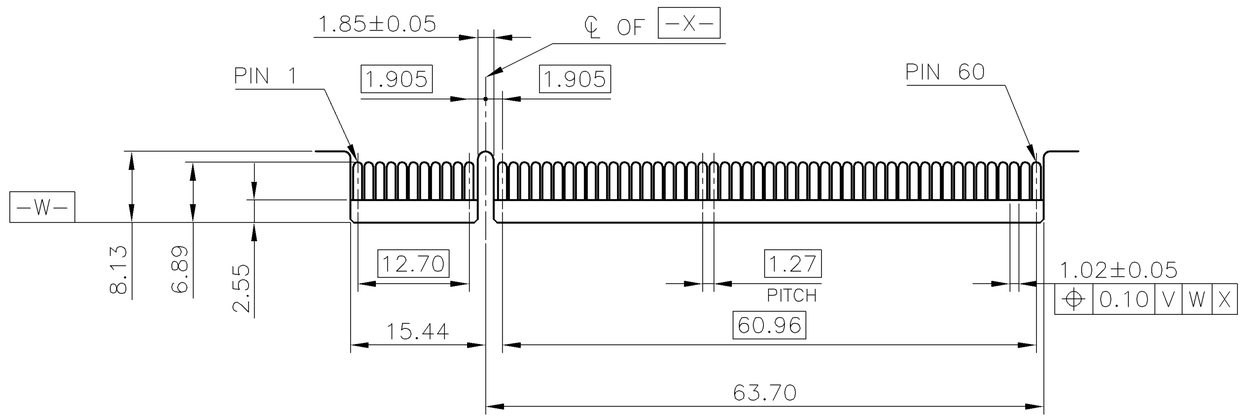

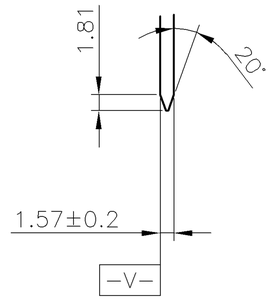

ADD-IN CARD EDGE-FINGER DIMENSIONS

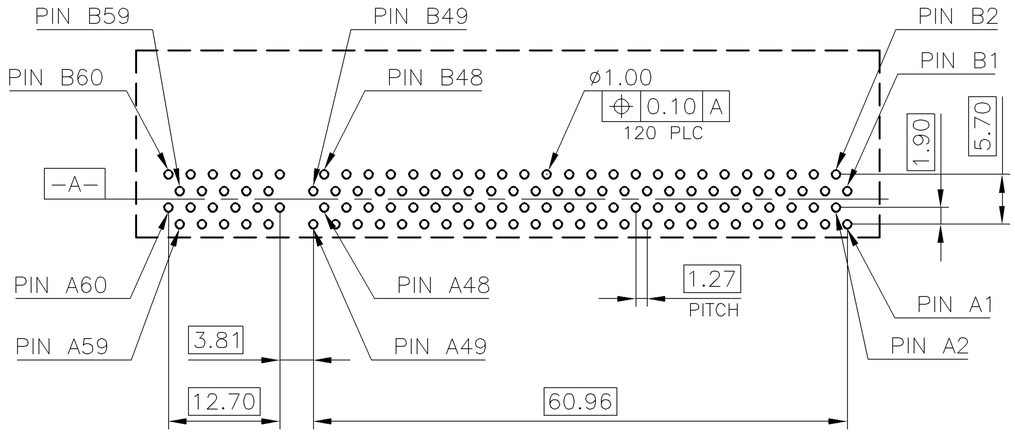

RECOMMENDED PCB LAYOUT (TOP VIEW)
TOLERANCE: ±0.05

THIS DRAWING IS A CONTROLLED DOCUMENT.

DIMENSIONS: mm

TOLERANCES UNLESS OTHERWISE SPECIFIED:

0 PLC	± –
1 PLC	± 0.3
2 PLC	± 0.2
3 PLC	± 0.15
4 PLC	± –
ANGLES	± 3°

MATERIAL –

FINISH –

DWN	–
CHK	–
APVD	–
PRODUCT SPEC	—
APPLICATION SPEC	—
WEIGHT	—

TE Connectivity

NAME
1.27mm PCI,
CARD EDGE, 120 POS, R/A

SIZE	CAGE CODE	DRAWING NO	RESTRICTED TO
A3	00779	C-1775403	—

CUSTOMER DRAWING | SCALE — | SHEET 2 OF 3 | REV A1

THIS DRAWING IS UNPUBLISHED. RELEASED FOR PUBLICATION – , – .
© COPYRIGHT 2011 BY TYCO ELECTRONICS CORPORATION. ALL RIGHTS RESERVED.

LOC	DIST
DW	—

REVISIONS

P	LTR	DESCRIPTION	DATE	DWN	APVD
		SEE SHEET 1.			

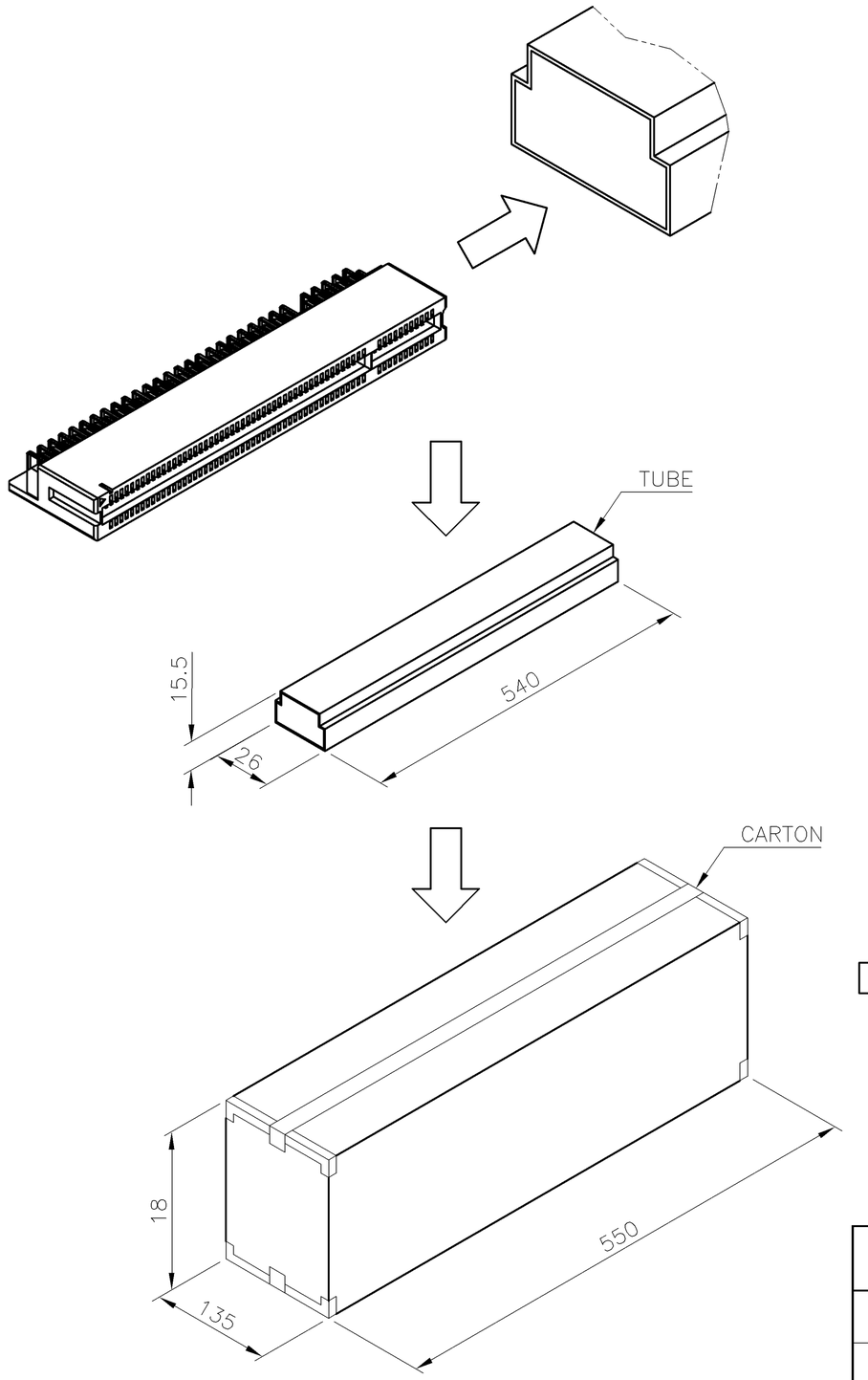

NOTES :
1. MATERIAL :
   1.1 TRAY: PVC, COLOR: TRANSPARENT.
   1.2 CARTON: CORRUGATED FIBER
   1.3 BOX: CORRUGATED FIBER
2. DIMENSION: SEE DRAWING
3. QUANTITY: SEE TABLE
4. WEIGHT: SEE TABLE

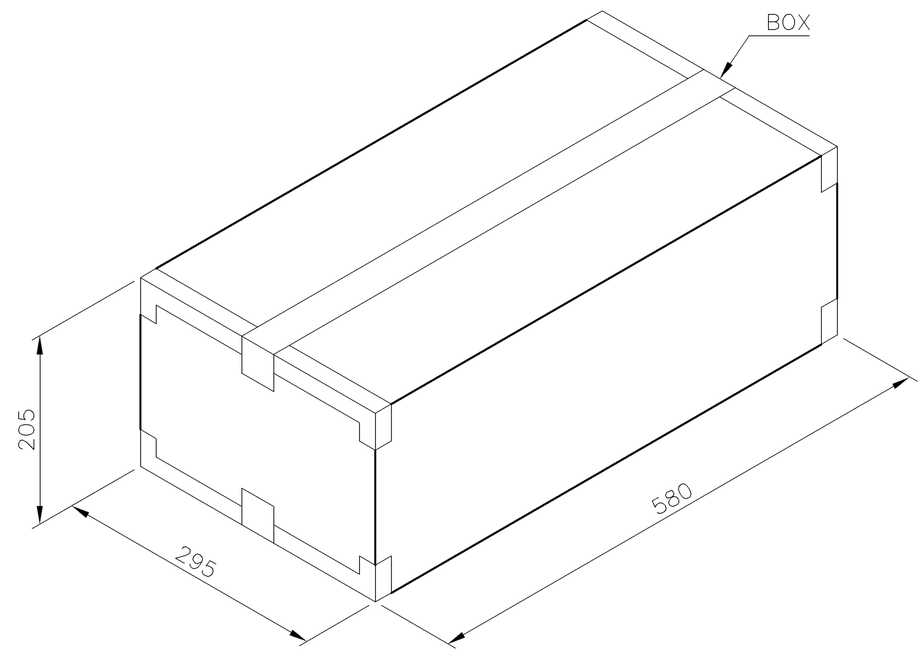

GROSS WEIGHT	NET WEIGHT	PCS/ TUBE	TUBE/ CARTON	CARTON/ BOX	PCS/ BOX
13.7 KG	8.8 KG	6	50	2	600

THIS DRAWING IS A CONTROLLED DOCUMENT.

DIMENSIONS: mm

TOLERANCES UNLESS OTHERWISE SPECIFIED:

0 PLC	± –
1 PLC	± 0.3
2 PLC	± 0.2
3 PLC	± 0.15
4 PLC	± –
ANGLES	± 3°

MATERIAL –

FINISH –

DWN –
CHK –
APVD –
PRODUCT SPEC —
APPLICATION SPEC —
WEIGHT —

TE Connectivity

NAME
1.27mm PCI,
CARD EDGE, 120 POS, R/A

SIZE	CAGE CODE	DRAWING NO	RESTRICTED TO
A3	00779	C-1775403	—

CUSTOMER DRAWING | SCALE — | SHEET 3 OF 3 | REV A1