REV.	ECN NO.	DATE	SIGN	DESCRIPTION

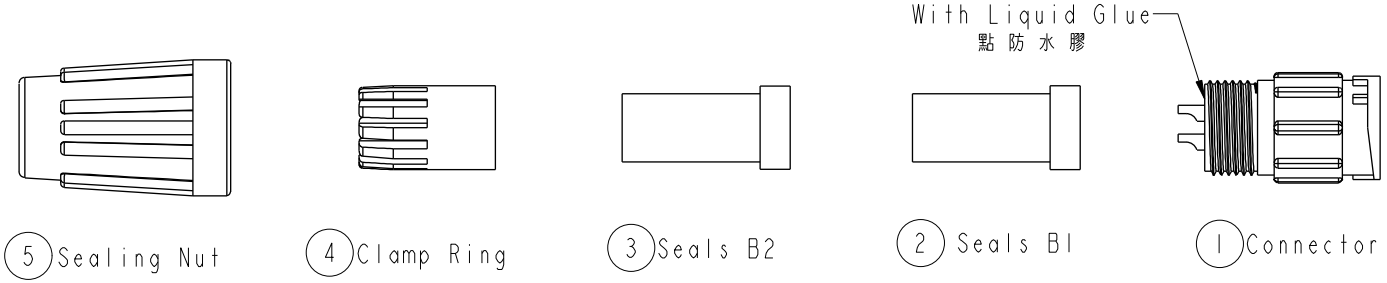

ALTW
DCC. DEPT.
CONFIENDIAL
2012-03-28
ISSUED

ALTW
CONFIDENTIAL
2012-03-19
R&D DEPT.

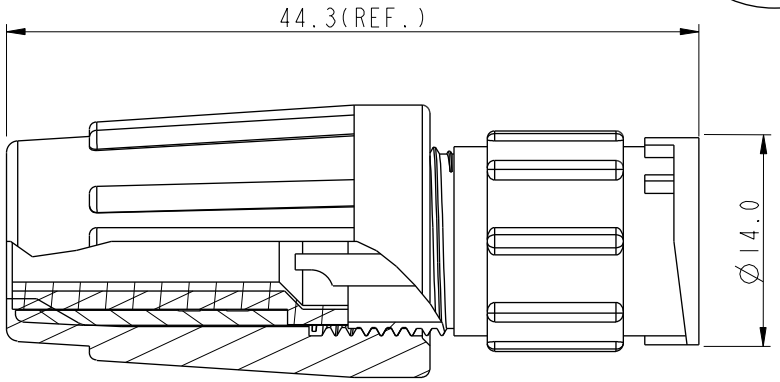

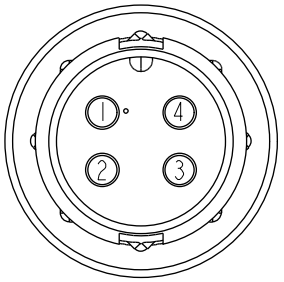

Pin Assignments
Front View 前視圖

Note:
* Seals B1 for Cable OD:Ø4.5mm~Ø6.5mm
  (防水墊圈B1線徑:Ø4.5mm~Ø6.5mm)
* Seals B2 for Cable OD:Ø3.5mm~Ø5.3mm
  (防水墊圈B2線徑:Ø3.5mm~Ø5.3mm)
* One Set Unassembled in One PE Bag
  (每一組未組裝,放置於一個PE袋,並封口)
* (QC) Important Dimension.
* Waterproof Rate : IP66
* Housing: Black,Nylon+GF
* Pin: Copper Alloy,Gold Plated
* Seals: Black,EPDM
* Clamping Ring: Black,Nylon
* Sealing Nut: Black,Nylon
* PE Bag: 90mm*85mm
* Liquid Glue: Clear

UNIT:mm

TOLERANCE
.X ±0.25
.XX ±0.1
.XXX ±0.05
ANGLES ±1°

TITLE: Standard,Assy Lock 4Pin M Conn M Pin

SCALE 1:1 | SIZE A4 | SHEET 1 OF 1
REV. A | WC-REV. A.2 | (QC):Inspection item

Amphenol LTW
安費諾亮泰企業股份有限公司

ITEM NO BD-04BMMA-LL6001	DRAWN BY SamChang	DATE 2012-03-19
DWG NO BD-04BMMA-LL6001	CHECKED BY Jeffrey	DATE 2012-03-28
CUSTOMER ALTW	APPROVED BY Kevin	DATE 2012-03-28

FMW10702-01-02A1

THIS DOCUMENT IS SUBJECT TO CHANGE WITHOUT NOTICE. IT IS CONFIDENTIAL AND A PROPERTY OF Amphenol LTW. DISCLOSURE TO THIRD PARTY HAS TO BE AUTHORIZED BY Amphenol LTW.