THIS DRAWING IS UNPUBLISHED. RELEASED FOR PUBLICATION -,- .
© COPYRIGHT - TE Connectivity ALL RIGHTS RESERVED.

REVISIONS

P	LTR	DESCRIPTION	DATE	DWN	APVD
	A3	REVISED PER ECO-17-011927	22AUG2017	RS	KR

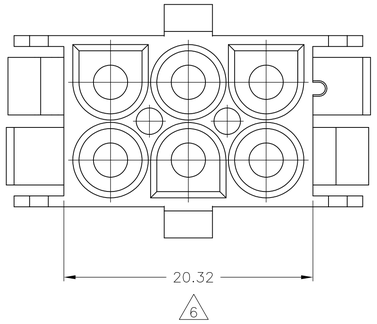

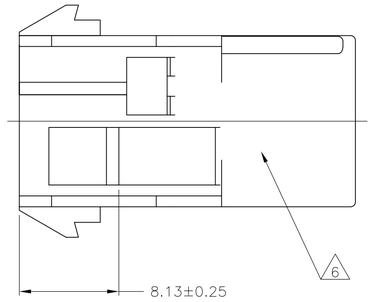

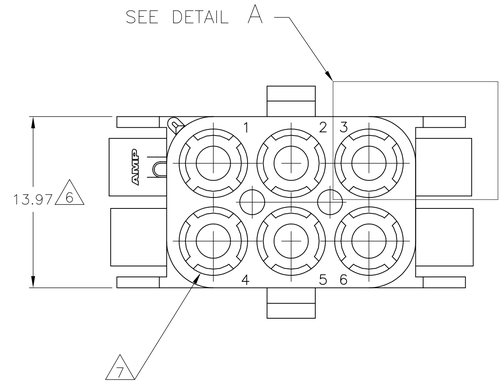

1 MATES WITH APPROPRIATE UNIVERSAL MATE-N-LOK™ PLUG.

2 RECOMMENDED PANEL THICKNESS 0.76 – 2.29.

3 PANEL MUST BE PUNCHED SO THAT THE HOUSING ENTERS THE PANEL IN THE SAME DIRECTION AS THE PUNCH.

4 OPTIONAL FOR KEYING HOUSING IN PANEL.

5 CIRCUIT NUMBER 1 LOCATION.

6 UNDERWRITER RECOGNIZED COMPONENT LOGO AND CSA CERTIFICATION LOGO TO BE LOCATED ONCE EACH SIDE ON SIDE OF HOUSING.

7 FOUR RIBS EQUALLY SPACED, NO SPECIFIC ORIENTATION. NO RIBS OR SIX RIBS EQUALLY SPACED, NO SPECIFIC ORIENTATION, OPTIONAL.

8 150° C TEMPERATURE RATING FOR THIS HOUSING IS FOR SHORT TERM DURATION. MAX OPERATING TEMPERATURE REMAINS 125° C.

9 SPECIAL PACKAGING.

10 PHOSPHOR BRONZE CONTACTS SHOULD ALWAYS BE USED WITH THIS HOUSING.

11 DIMENSIONS SHOWN REPRESENT PRODUCT IN DRY, AS MOLDED CONDITION ADDITIONAL 2% GROWTH DUE TO SUBSEQUENT MOISTURE ABSORPTION MAY OCCUR AND SHOULD BE ACCOUNTED FOR.

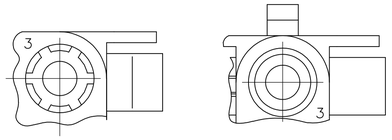

DETAIL A
OPTIONAL CONSTRUCTIONS

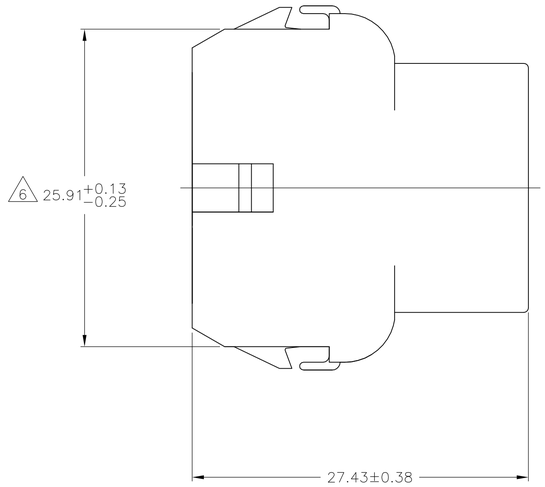

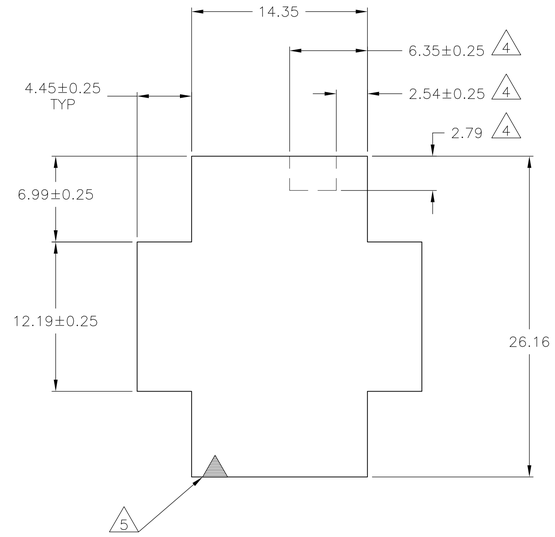

RECOMMENDED PANEL CUT-OUT

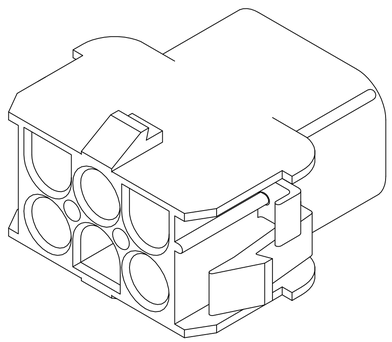

3-DIMENSIONAL MODEL
NTS

6.35	.250	27.43	1.080
4.45	.175	26.16	1.030
2.79	.110	25.91	1.020
2.54	.100	20.32	.800
2.29	.090	14.35	.565
0.76	.030	13.97	.550
0.38	.015	12.19	.480
0.25	.010	8.13	.320
0.13	.005	6.99	.275
MM	IN	MM	IN

CONVERSION TABLE

9 8-794536-1
794536-1
PART NUMBER

THIS DRAWING IS A CONTROLLED DOCUMENT.

DIMENSIONS: mm

TOLERANCES UNLESS OTHERWISE SPECIFIED:
0 PLC ± –
1 PLC ± –
2 PLC ± 0.13
3 PLC ± –
4 PLC ± –
ANGLES ± –

MATERIAL: NYLON, UL 94V-2,BLACK
FINISH: –

METRIC

DWN K. WHITAKER 18NOV98
CHK R. SWING 18NOV98
APVD D. SELF 18NOV98
PRODUCT SPEC –
APPLICATION SPEC –
WEIGHT 0.000000

TE Connectivity

NAME CAP, 6 CIRCUIT, UNIVERSAL MATE-N-LOK –

SIZE	CAGE CODE	DRAWING NO	RESTRICTED TO
A1	–	C-794536	–

CUSTOMER DRAWING | SCALE 4:1 | SHEET 1 OF 1 | REV A3

4805 (1/15)