65V NPN MATCHED PAIR SMALL SIGNAL TRANSISTOR IN SOT363

Features

- Ultra-Small Surface Mount Package
- Current Gain Matching
- Base-Emitter Voltage Matching
- Ideally Suited for Automated Insertion
- For Switching and AF Amplifier Application
- **Totally Lead-Free & Fully RoHS Compliant (Notes 1 & 2)**
- **Halogen and Antimony Free. "Green" Device (Note 3)**
- **Qualified to AEC-Q101 Standards for High Reliability**

Mechanical Data

- Case: SOT363
- Case Material: Molded Plastic, “Green” Molding Compound. UL Flammability Classification Rating 94V-0
- Moisture Sensitivity: Level 1 per J-STD-020
- Terminals: Finish — Matte Tin Finish. Solderable per MIL-STD-202, Method 208 e3
- Weight: 0.006 grams (Approximate)

SOT363

Top View

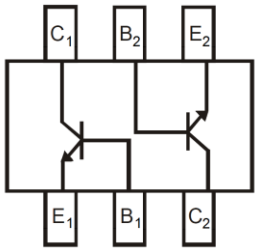

Device Schematic
Top View

Ordering Information (Note 4)

Part Number	Compliance	Marking	Reel Size (inches)	Tape Width (mm)	Quantity Per Reel
BCM846BS-7	AEC-Q101	2K7	7	8	3,000

Notes:
1. No purposely added lead. Fully EU Directive 2002/95/EC (RoHS), 2011/65/EU (RoHS 2) & 2015/863/EU (RoHS 3) compliant.
2. See https://www.diodes.com/quality/lead-free/ for more information about Diodes Incorporated’s definitions of Halogen- and Antimony-free, "Green" and Lead-free.
3. Halogen- and Antimony-free "Green” products are defined as those which contain <900ppm bromine, <900ppm chlorine (<1500ppm total Br + Cl) and <1000ppm antimony compounds.
4. For packaging details, go to our website at https://www.diodes.com/design/support/packaging/diodes-packaging/.

Marking Information

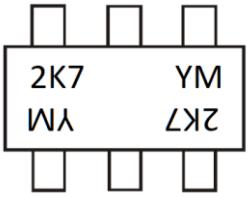

2K7 = Product Type Marking Code
YM = Date Code Marking
Y = Year (ex: F = 2018)
M = Month (ex: 9 = September)

Date Code Key

Year	2018	2019	2020	2021	2022	2023	2024	2025
Code	F	G	H	I	J	K	L	M

Month	Jan	Feb	Mar	Apr	May	Jun	Jul	Aug	Sep	Oct	Nov	Dec
Code	1	2	3	4	5	6	7	8	9	O	N	D

© Diodes Incorporated

Maximum Ratings (@T_A = +25°C, unless otherwise specified.)

Characteristic	Symbol	Value	Unit
Collector-Base Voltage	V_{CBO}	80	V
Collector-Emitter Voltage	V_{CEO}	65	V
Emitter-Base Voltage	V_{EBO}	6	V
Collector Current	I_C	100	mA
Peak Collector Current	I_{CM}	200	mA
Peak Base Current	I_{BM}	200	mA

Thermal Characteristics (@T_A = +25°C, unless otherwise specified.)

Characteristic	Symbol	Value	Unit
Power Dissipation (Note 5)	P_D	200	mW
Thermal Resistance, Junction to Ambient (Note 6)	$R_{\theta JA}$	625	°C/W
Operating and Storage Temperature Range	T_J, T_{STG}	-65 to +150	°C

ESD Ratings (Note 6)

Characteristic	Symbol	Value	Unit	JEDEC Class
Electrostatic Discharge – Human Body Model	ESD HBM	4,000	V	3A
Electrostatic Discharge – Machine Model	ESD MM	400	V	C

Electrical Characteristics (@T_A = +25°C, unless otherwise specified.)

Characteristic (Note 7)	Symbol	Min	Typ	Max	Unit	Test Condition
Collector-Base Breakdown Voltage	BV_{CBO}	80	—	—	V	I_C = 100µA, I_B = 0
Collector-Emitter Breakdown Voltage	BV_{CEO}	65	—	—	V	I_C = 10mA, I_B = 0
Emitter-Base Breakdown Voltage	BV_{EBO}	6	—	—	V	I_E = 100µA, I_C = 0
DC Current Gain	h_{FE}	200	—	450	—	V_{CE} = 5V, I_C = 2mA
DC Current Gain Matching	h_{FE1}/h_{FE2}	0.9	1	1.1	—	V_{CE} = 5V, I_C = 2mA
Collector-Emitter Saturation Voltage	$V_{CE(SAT)}$	—	—	100 400	mV	I_C = 10mA, I_B = 0.5mA I_C = 100mA, I_B = 5mA
Base-Emitter Saturation Voltage	$V_{BE(SAT)}$	—	755	—	mV	I_C = 10mA, I_B = 0.5mA
		—	905	—	mV	I_C = 100mA, I_B = 5mA
Base-Emitter Voltage	$V_{BE(ON)}$	610	665	710	mV	V_{CE} = 5V, I_C = 2mA
Base-Emitter Voltage Matching	$V_{BE1(ON)}$ - $V_{BE2(ON)}$	-2	—	2	mV	V_{CE} = 5V, I_C = 2mA
Collector-Cutoff Current	I_{CBO}	— —	— —	15 5	nA µA	V_{CB} = 40V V_{CB} = 40V, T_A = +125°C
Emitter-Cutoff Current	I_{EBO}	—	—	20	nA	V_{EB} = 5V, I_C = 0
Gain Bandwidth Product	f_T	100	—	—	MHz	V_{CE} = 5V, I_C = 10mA, f = 100MHz
Collector-Base Capacitance	C_{CBO}	—	2	3	pF	V_{CB} = 10V, f = 1MHz
Emitter-Base Capacitance	C_{EBO}	—	11	—	pF	V_{EB} = 0.5V, f = 1MHz

Notes:
5. For a device mounted with the collector lead on minimum recommended pad layout 1oz copper that is on a single-sided 1.6mm FR-4 PCB; device is measured under still air conditions whilst operating in a steady-state.
6. Refer to JEDEC specification JESD22-A114 and JESD22-A115.
7. Short duration pulse test used to minimize self-heating effect.

© Diodes Incorporated

Typical Electrical Characteristics (@T_A = +25°C, unless otherwise specified.)

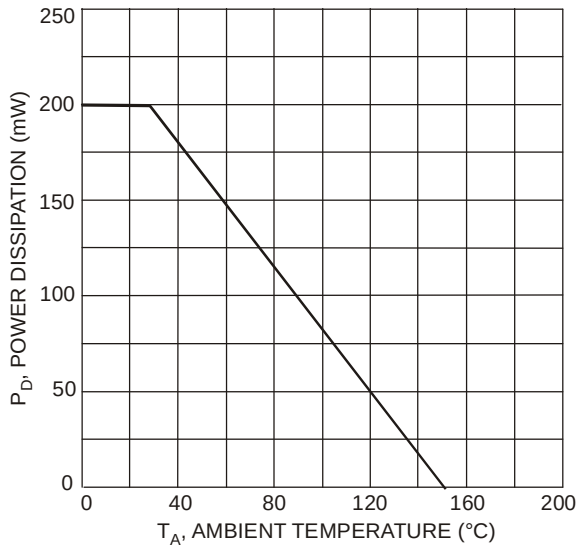

Figure 1 Power Derating Curve

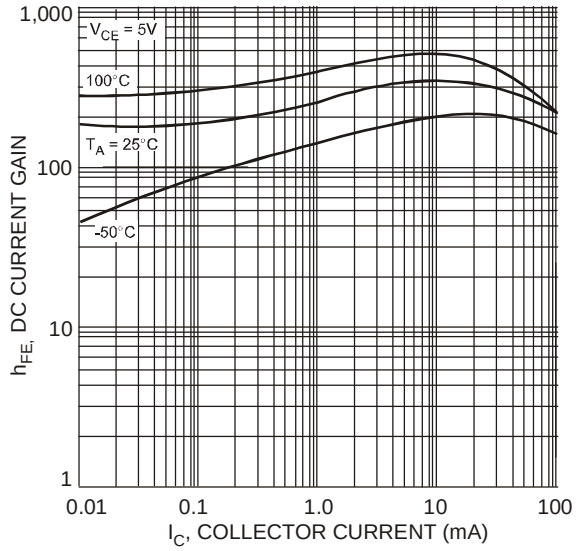

Figure 2 Typical DC Current Gain vs. Collector Current

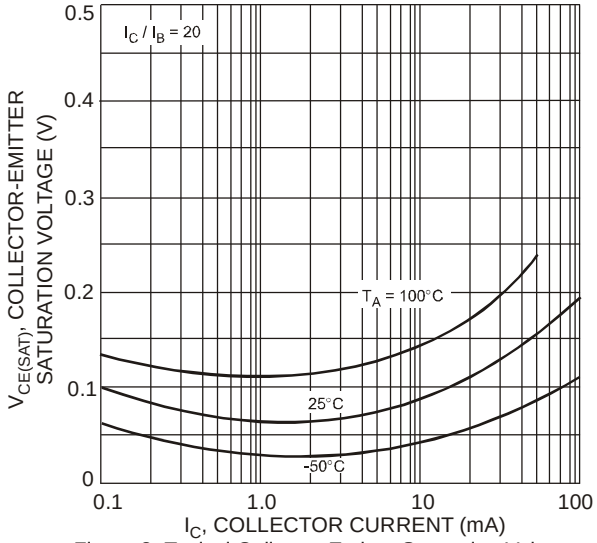

Figure 3 Typical Collector-Emitter Saturation Voltage vs. Collector Current

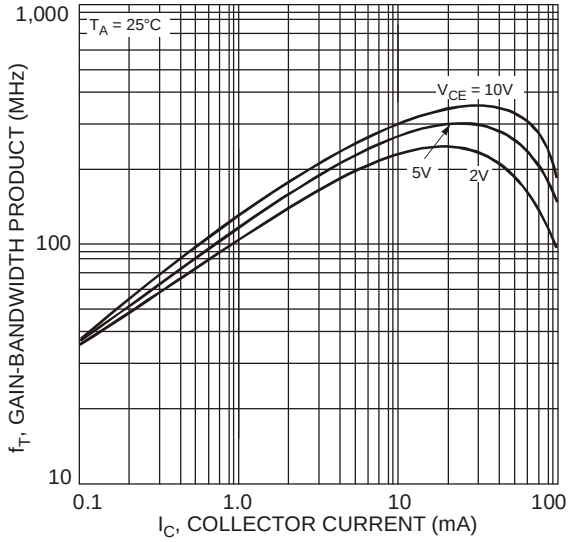

Figure 4 Typical Gain-Bandwidth Product vs. Collector Current

© Diodes Incorporated

Package Outline Dimensions

Please see http://www.diodes.com/package-outlines.html for the latest version.

SOT363

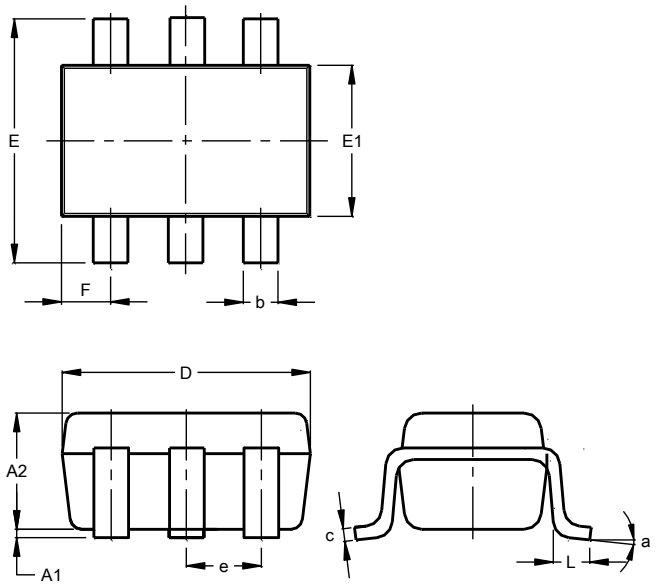

SOT363			
Dim	**Min**	**Max**	**Typ**
A1	0.00	0.10	0.05
A2	0.90	1.00	0.95
b	0.10	0.30	0.25
c	0.10	0.22	0.11
D	1.80	2.20	2.15
E	2.00	2.20	2.10
E1	1.15	1.35	1.30
e	0.650 BSC		
F	0.40	0.45	0.425
L	0.25	0.40	0.30
a	0°	8°	--
All Dimensions in mm			

Suggested Pad Layout

Please see http://www.diodes.com/package-outlines.html for the latest version.

SOT363

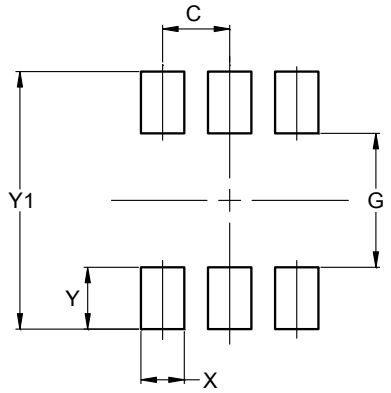

Dimensions	Value (in mm)
C	0.650
G	1.300
X	0.420
Y	0.600
Y1	2.500

© Diodes Incorporated

IMPORTANT NOTICE

DIODES INCORPORATED MAKES NO WARRANTY OF ANY KIND, EXPRESS OR IMPLIED, WITH REGARDS TO THIS DOCUMENT, INCLUDING, BUT NOT LIMITED TO, THE IMPLIED WARRANTIES OF MERCHANTABILITY AND FITNESS FOR A PARTICULAR PURPOSE (AND THEIR EQUIVALENTS UNDER THE LAWS OF ANY JURISDICTION).

Diodes Incorporated and its subsidiaries reserve the right to make modifications, enhancements, improvements, corrections or other changes without further notice to this document and any product described herein. Diodes Incorporated does not assume any liability arising out of the application or use of this document or any product described herein; neither does Diodes Incorporated convey any license under its patent or trademark rights, nor the rights of others. Any Customer or user of this document or products described herein in such applications shall assume all risks of such use and will agree to hold Diodes Incorporated and all the companies whose products are represented on Diodes Incorporated website, harmless against all damages.

Diodes Incorporated does not warrant or accept any liability whatsoever in respect of any products purchased through unauthorized sales channel. Should Customers purchase or use Diodes Incorporated products for any unintended or unauthorized application, Customers shall indemnify and hold Diodes Incorporated and its representatives harmless against all claims, damages, expenses, and attorney fees arising out of, directly or indirectly, any claim of personal injury or death associated with such unintended or unauthorized application.

Products described herein may be covered by one or more United States, international or foreign patents pending. Product names and markings noted herein may also be covered by one or more United States, international or foreign trademarks.

This document is written in English but may be translated into multiple languages for reference. Only the English version of this document is the final and determinative format released by Diodes Incorporated.

LIFE SUPPORT

Diodes Incorporated products are specifically not authorized for use as critical components in life support devices or systems without the express written approval of the Chief Executive Officer of Diodes Incorporated. As used herein:

A. Life support devices or systems are devices or systems which:

1. are intended to implant into the body, or
2. support or sustain life and whose failure to perform when properly used in accordance with instructions for use provided in the labeling can be reasonably expected to result in significant injury to the user.

B. A critical component is any component in a life support device or system whose failure to perform can be reasonably expected to cause the failure of the life support device or to affect its safety or effectiveness.

Customers represent that they have all necessary expertise in the safety and regulatory ramifications of their life support devices or systems, and acknowledge and agree that they are solely responsible for all legal, regulatory and safety-related requirements concerning their products and any use of Diodes Incorporated products in such safety-critical, life support devices or systems, notwithstanding any devices- or systems-related information or support that may be provided by Diodes Incorporated. Further, Customers must fully indemnify Diodes Incorporated and its representatives against any damages arising out of the use of Diodes Incorporated products in such safety-critical, life support devices or systems.

Copyright © 2018, Diodes Incorporated

www.diodes.com