National Semiconductor

F100324
Low Power Hex TTL-to-ECL Translator

General Description

The F100324 is a hex translator, designed to convert TTL logic levels to 100K ECL logic levels. The inputs are compatible with standard or Schottky TTL. A common Enable (E), when LOW, holds all inverting outputs HIGH and holds all true outputs LOW. The differential outputs allow each circuit to be used as an inverting/non-inverting translator, or as a differential line driver. The output levels are voltage compensated over the full −4.2V to −5.7V range.

When the circuit is used in the differential mode, the F100324, due to its high common mode rejection, overcomes voltage gradients between the TTL and ECL ground systems. The V_{EE} and V_{TTL} power may be applied in either order.

The F100324 is pin and function compatible with the F100124 with similar AC performance, but features power dissipation roughly half of the F100124 to ease system cooling requirements.

Features

- Pin/function compatible with F100124
- Meets F100124 AC specifications
- 50% power reduction of the F100124
- Differential outputs
- 2000V ESD protection
- −4.2V to −5.7V operating range

Ordering Code: See Section 8

Logic Diagram

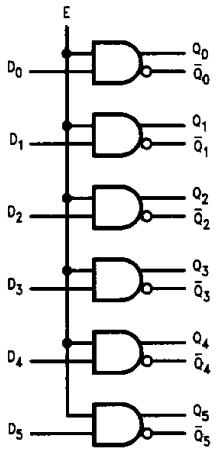

TL/F/9878-4

Pin Names	Description
D_0–D_5	Data Inputs
E	Enable Input
Q_0–Q_5	Data Outputs
$\overline{Q}_0$–$\overline{Q}_5$	Complementary Data Outputs

Connection Diagrams

24-Pin DIP

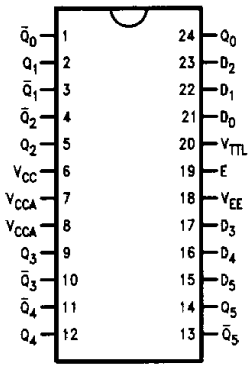

TL/F/9878-1

28-Pin PCC

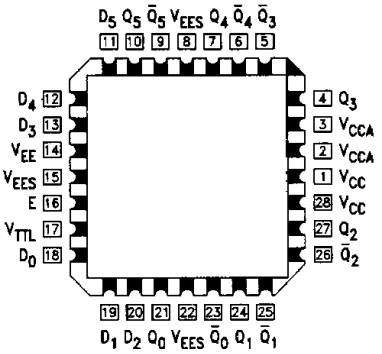

TL/F/9878-3

24-Pin Quad Cerpak

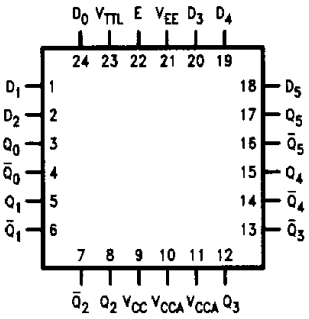

TL/F/9878-2

Absolute Maximum Ratings

Above which the useful life may be impaired. (Note 1)

If Military/Aerospace specified devices are required, please contact the National Semiconductor Sales Office/Distributors for availability and specifications.

Storage Temperature (T_{STG})	−65°C to +150°C
Maximum Junction Temperature (T_J)	
Ceramic	+175°C
Plastic	+150°C
V_{EE} Pin Potential to Ground Pin	−7.0V to +0.5V
V_{TTL} Pin Potential to Ground Pin	+6.0V to −0.5V
Input Voltage (DC)	V_{EE} to +0.5V
Output Current (DC Output HIGH)	−50 mA
ESD (Note 2)	≥2000V

Recommended Operating Conditions

Case Temperature (T_C)	
Commercial	0°C to +85°C
Military	−55°C to +125°C
Supply Voltage (V_{EE})	
Commercial	−5.7V to −4.2V
Military	−5.7V to −4.2V

DC Electrical Characteristics

V_{EE} = −4.2V to −5.7V, V_{CC} = V_{CCA} = GND, T_C = 0°C to +85°C (Note 3)

Symbol	Parameter	Min	Typ	Max	Units	Conditions	
V_{OH}	Output HIGH Voltage	−1025	−955	−870	mV	V_{IN} = $V_{IH\ (Max)}$ or $V_{IL\ (Min)}$	Loading with 50Ω to −2.0V
V_{OL}	Output LOW Voltage	−1830	−1705	−1620			
V_{OHC}	Output HIGH Voltage	−1035			mV	V_{IN} = $V_{IH(Min)}$ or $V_{IL\ (Max)}$	Loading with 50Ω to −2.0V
V_{OLC}	Output LOW Voltage			−1610			
V_{IH}	Input HIGH Voltage	2.0		5.0	V	Guaranteed HIGH Signal for All Inputs	
V_{IL}	Input LOW Voltage	0		0.8	V	Guaranteed LOW Signal for All Inputs	
V_{CD}	Input Clamp Diode Voltage	−1.2			V	I_{IN} = −18 mA	
I_{IH}	Input HIGH Current Data Enable			 20 120	μA	V_{IN} = +2.4V, All Other Inputs V_{IN} = GND	
	Input HIGH Current Breakdown Test, All Inputs			1.0	mA	V_{IN} = +5.5V, All Other Inputs = GND	
I_{IL}	Input LOW Current Data Enable	 −0.9 −5.4			mA	V_{IN} = +0.4V, All Other Inputs V_{IN} = V_{IH}	
I_{EE}	V_{EE} Power Supply Current	−70	−45	−22	mA	All Inputs V_{IN} = +4.0V	
I_{TTL}	V_{TTL} Power Supply Current		25	38	mA	All Inputs V_{IN} = GND	

Note 1: Absolute maximum ratings are those values beyond which the device may be damaged or have its useful life impaired. Functional operation under these conditions is not implied.

Note 2: ESD testing conforms to MIL-STD-883, Method 3015.

Note 3: The specified limits represent the "worst case" value for the parameter. Since these values normally occur at the temperature extremes, additional noise immunity and guardbanding can be achieved by decreasing the allowable system operating ranges. Conditions for testing shown in the tables are chosen to guarantee operation under "worst case" conditions.

Ceramic Dual-In-Line Package AC Electric Characteristics

V_{EE} = −4.2V to −5.7V, V_{CC} = V_{CCA} = GND, V_{TTL} = +4.5V to +5.5V

Symbol	Parameter	T_C = 0°C		T_C = +25°C		T_C = +85°C		Units	Conditions
		Min	Max	Min	Max	Min	Max		
t_{PLH} t_{PHL}	Propagation Delay Data and Enable to Output	0.50	3.00	0.50	2.90	0.50	3.00	ns	*Figures 1* and *2*
t_{TLH} t_{THL}	Transition Time 20% to 80%, 80% to 20%	0.45	1.80	0.45	1.80	0.45	1.80	ns	

PCC and Cerpak AC Electrical Characteristics

V_{EE} = −4.2V to −5.7V, V_{CC} = V_{CCA} = GND, V_{TTL} = +4.5V to +5.5V

Symbol	Parameter	T_C = 0°C		T_C = +25°C		T_C = +85°C		Units	Conditions
		Min	Max	Min	Max	Min	Max		
t_{PLH} t_{PHL}	Propagation Delay Data and Enable to Output	0.50	2.80	0.50	2.70	0.50	2.80	ns	*Figures 1* and *2*
t_{TLH} t_{THL}	Transition Time 20% to 80%, 80% to 20%	0.45	1.70	0.45	1.70	0.45	1.70	ns	
$t_{S\ G-G}$	Skew, Gate to Gate		TBD		TBD		TBD	ps	PCC Only (Note 1)

Note 1: Gate to gate skew is defined as the difference in the propagation delays between each of the outputs.

Military Version—Preliminary

DC Electrical Characteristics

V_{EE} = −4.2V to −5.7V, V_{CC} = V_{CCA} = GND, T_C = −55°C to +125°C, V_{TTL} = +4.5V to +5.5V

Symbol	Parameter	Min	Max	Units	T_C	Conditions		Notes
V_{OH}	Output HIGH Voltage	−1025	−870	mV	0°C to +125°C	V_{IN} = V_{IH} (Max) or V_{IL} (Min)	Loading with 50Ω to −2.0V	1, 2, 3
		−1085	−870	mV	−55°C			
V_{OL}	Output LOW Voltage	−1830	−1620	mV	0°C to +125°C			
		−1830	−1555	mV	−55°C			
	Cutoff Voltage		−1950	mV	0°C to +125°C	OE or DIR Low		
			−1915	mV	−55°C			
V_{OHC}	Output HIGH Voltage	−1035		mV	0°C to +125°C	V_{IN} = V_{IH} (Max) or V_{IL} (Min)	Loading with 50Ω to −2.0V	1, 2, 3
		−1085		mV	−55°C			
V_{OLC}	Output LOW Voltage		−1610	mV	0°C to +125°C			
			−1555	mV	−55°C			
V_{IH}	Input HIGH Voltage	2.0	5.0	V	−55°C to +125°C	Over V_{TTL}, V_{EE}, T_C Range		1, 2, 3, 4
V_{IL}	Input LOW Voltage	0.0	0.8	V	−55°C to +125°C	Over V_{TTL}, V_{EE}, T_C Range		1, 2, 3, 4
I_{IH}	Input HIGH Current		20	μA	−55°C to +125°C	V_{IN} = +2.7V		1, 2, 3
	Breakdown Test		100	μA	−55°C to +125°C	V_{IN} = +5.5V		

Military Version—Preliminary (Continued)

DC Electrical Characteristics

V_{EE} = −4.2V to −5.7V, V_{CC} = V_{CCA} = GND, T_C = −55°C to +125°C, V_{TTL} = +4.5V to +5.5V (Continued)

Symbol	Parameter	Min	Max	Units	T_C	Conditions	Notes
I_{IL}	Input LOW Current Data Enable	 −0.9 −5.4		mA	−55°C to +125°C	V_{IN} = +0.5V	1, 2, 3
V_{FCD}	Input Clamp Diode Voltage		−1.2	V	−55°C to +125°C	I_{IN} = −18 mA	1, 2, 3
I_{EE}	V_{EE} Power Supply Current	−70	−22	mA	−55°C to +125°C	All Inputs V_{IN} = +4.0V	1, 2, 3
I_{TTL}	V_{TTL} Power Supply Current		38	mA	−55°C to +125°C	All Inputs V_{IN} = GND	1, 2, 3

Note 1: F100K 300 Series cold temperature testing is performed by temperature soaking (to guarantee junction temperature equals −55°C), then testing immediately without allowing for the junction temperature to stabilize due to heat dissipation after power-up. This provides "cold start" specs which can be considered a worst case condition at cold temperatures.

Note 2: Screen tested 100% on each device at −55°C, +25°C, and +125°C, Subgroups 1, 2, 3, 7, and 8.

Note 3: Sample tested (Method 5005, Table I) on each manufactured lot at −55°C, +25°C, and +125°C, Subgroups A1, 2, 3, 7, and 8.

Note 4: Guaranteed by applying specified input condition and testing V_{OH}/V_{OL}.

Ceramic Dual-In-Line Package AC Electric Characteristics

V_{EE} = −4.2V to −5.7V, V_{CC} = V_{CCA} = GND, V_{TTL} = +4.5V to +5.5V

Symbol	Parameter	T_C = −55°C		T_C = +25°C		T_C = +125°C		Units	Conditions	Notes
		Min	Max	Min	Max	Min	Max			
t_{PLH} t_{PHL}	Propagation Delay Data and Enable to Output	0.50	3.00	0.50	2.90	0.30	3.30	ns	*Figures 1* and *2*	1, 2, 3,
t_{TLH} t_{THL}	Transition Time 20% to 80%, 80% to 20%	0.35	1.80	0.45	1.80	0.45	1.80	ns		4

Cerpak AC Electrical Characteristics

V_{EE} = −4.2V to −5.7V, V_{CC} = V_{CCA} = GND, V_{TTL} = +4.5V to +5.5V

Symbol	Parameter	T_C = −55°C		T_C = +25°C		T_C = +125°C		Units	Conditions	Notes
		Min	Max	Min	Max	Min	Max			
t_{PLH} t_{PHL}	Propagation Delay Data and Enable to Output	0.50	3.00	0.50	2.90	0.30	3.30	ns	*Figures 1* and *2*	1, 2, 3
t_{TLH} t_{THL}	Transition Time 20% to 80%, 80% to 20%	0.35	1.80	0.45	1.80	0.45	1.80	ns		4

Note 1: F100K 300 Series cold temperature testing is performed by temperature soaking (to guarantee junction temperature equals −55°C), then testing immediately after power-up. This provides "cold start" specs which can be considered a worst case condition at cold temperatures.

Note 2: Screen tested 100% on each device at +25°C temperature only, Subgroup A9.

Note 3: Sample tested (Method 5005, Table I) on each manufactured lot at +25°C, Subgroup A9, and at +125°C and −55°C temperatures, Subgroups A10 and A11.

Note 4: Not tested at +25°C, +125°C, and −55°C temperature (design characterization data).

Switching Waveform

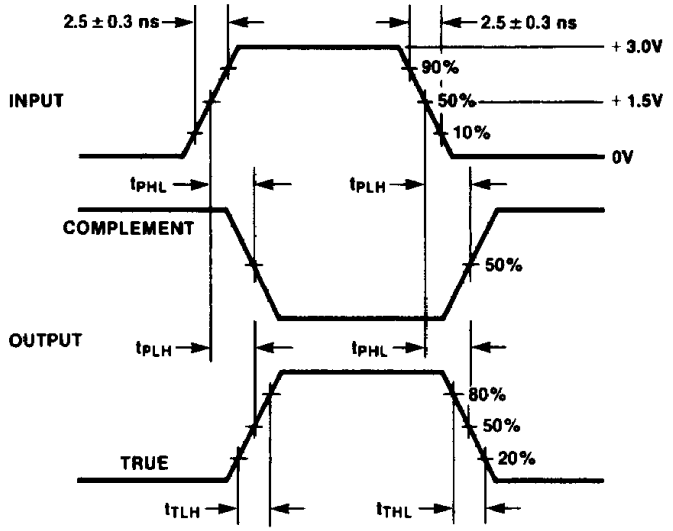

TL/F/9878-6

FIGURE 1. Propagation Delay and Transition Times

Test Circuit

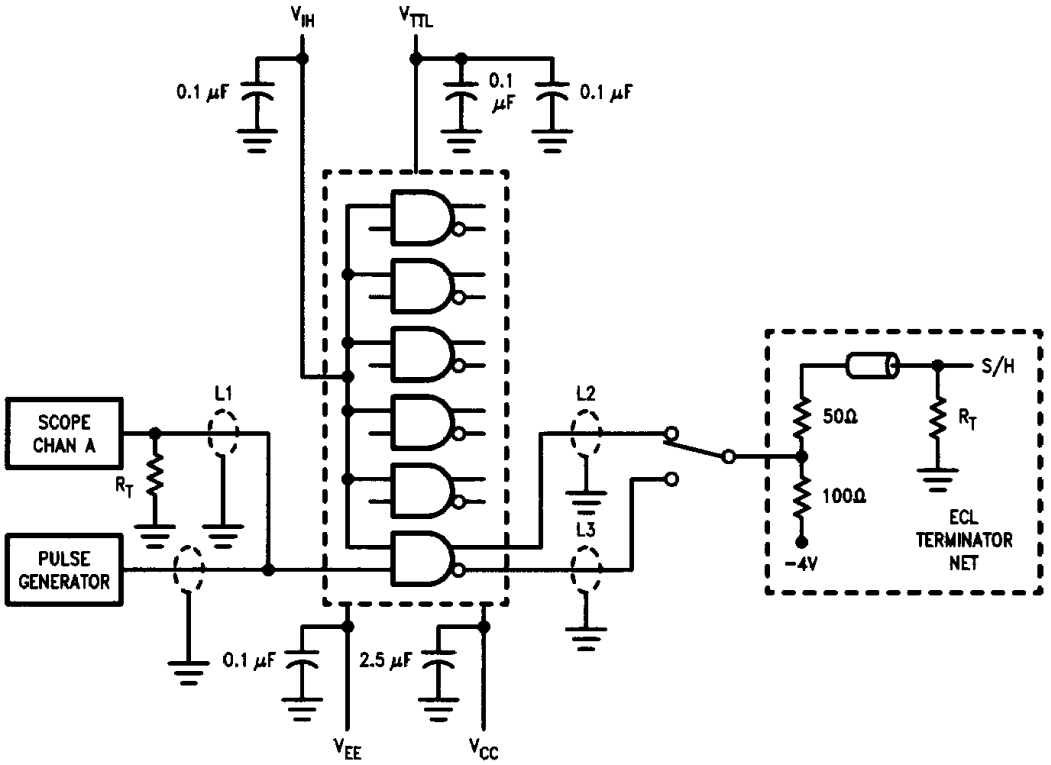

TL/F/9878-5

FIGURE 2. AC Test Circuit

Notes:

V_{CC}, V_{CCA} = 0V, V_{EE} = −4.5V, V_{TTL} = +5.0V, V_{IH} = +3.0V

L1, L2 and L3 = equal length 50Ω impedance lines

R_T = 50Ω terminator internal to scope

Decoupling 0.1 μF from GND to V_{CC}, V_{EE} and V_{TTL}

All unused outputs are loaded with 50Ω to GND

C_L = Fixture and stray capacitance ≤ 3 pF