REVISIONS			
REV	DESCRIPTION	DATE	APPROVED
01 1	REDRAWN	12/03/95	

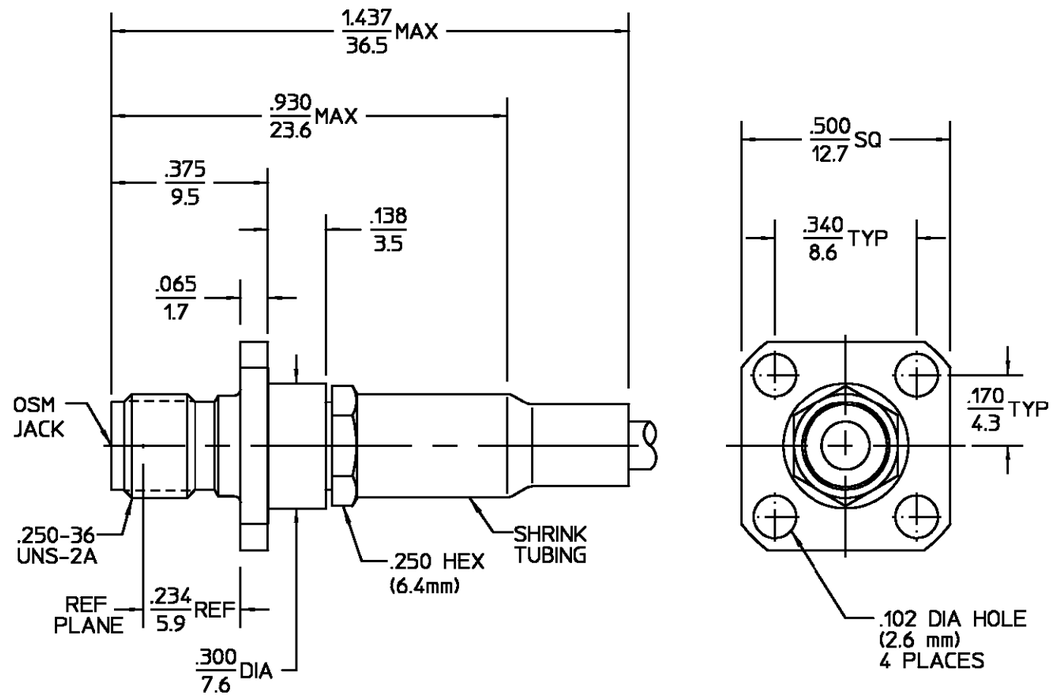

DESIGNED FOR USE WITH RG-196 CABLE	
CABLE ENTRY DIAMETER MINIMUM	
SLEEVE	.032
CONTACT	.016

COMPONENT	MATERIAL	FINISH
HOUSING CLAMP NUT SLEEVE	STAINLESS STEEL PER ASTM-A484 AND ASTM-A582, TYPE 303	GOLD PLATE PER MIL-G-45204
DIELECTRIC	TFE FLUOROCARBON PER ASTM-D-1457	N/A
CENTER CONTACT	BERYLLIUM COPPER PER ASTM-B-196 OR ASTM-B-197, ALLOY C17300, CONDITION H	GOLD PLATE PER MIL-G-45204
GASKET	VITON "A" PER MIL-R-83248	N/A
SHRINK TUBING	HEAT SHRINKABLE POLYOLEFIN COMPOUND MIL-I-23053/11	N/A
FERRULE	COPPER OR BRASS ALLOY ROCKWELL F65 MAXIMUM	GOLD PLATE PER MIL-G-45204
REAR DIELECTRIC	NYLON	N/A

ELECTRICAL	
Nominal Impedance (Ohms)	50
Frequency Range (GHz)	DC to 12.4
Volt Rating (VRMS MAX)	
@ Sea Level	250
VSWR --	1.15 + .01
Insertion Loss	0.15 dB Max at 6GHz
RF Leakage (dB MIN)	-60dB Min @ 2-3 GHz
Corona, 70,000 Ft (VRMS MIN)	190
Dielectric Withstanding Voltage	
(VRMS MIN) @ Sea Level	750
Contact Resistance (Milliohms MAX)	
Center Contact	3.0
Outer Contact	2.0
Cable to Housing	0.5
RF High Potential @ Sea Level	
(VRMS MIN @ 5 MHz)	500
I.R.(Megohms MIN)	10,000

MECHANICAL	
Interface Dimensions MIL-STD-348A,	
Fig.	310.2
Recommended Mating	
Torque	7 - 10 IN LBS.
Mating Characteristics:	
Insertion (MAX Lbs)	3
Withdrawal (MIN Oz)	1
Force to Engage and	
Disengage (In-Lbs MAX)	2
Center Contact Captivation	
Axial (Lbs)	6.0 MIN
Radial (In-Oz)	N/A
Cable Retention	
Axial Force (Lbs)	20 MIN
Torque (In-Oz)	N/A
Weight (Grams)	TBD

ENVIRONMENTAL
Temperature Rating -65°C To +165°C
Vibration MIL-STD-202, Method 204, Condition D
Shock MIL-STD-202, Method 213, Condition I
Thermal Shock MIL-STD-202, Method 107, Condition B, Except High Temp +85°C
Moisture Resistance MIL-STD-202, Method 106
Corrosion - MIL-STD-202, Method 101, Condition B, 5% salt spray

UNLESS OTHERWISE SPECIFIED DIMENSIONS ARE IN INCHES

FRAC. ± 1/64 DEC. ±.005 ANGLES ± 1°

DRAWN BY M.M. DATE 10/27/94
CHECKED BY
APP'D BY 12/6/95

AMP

AMP Incorporated
140 Fourth Avenue
Waltham, MA 02451-7599

These drawings and specifications are the property of M/A COM Interconnect Div. and shall not be reproduced or copied or used in whole or in part as the basis for the manufacture or sale of item(s) without written permission.

USE ASS'Y PROCEDURE

NO. A.P. 20-059
408-04806

TITLE OSM 4 HOLE FLANGE MOUNT CABLE JACK CRIMP ATTACHMENT

SIZE	CODE IDENT NO.		REV
B	26805	2036-5016-00	01 1
SCALE 3 : 1			SHEET 1 OF 1

CUSTOMER DRAWING

AMP PART # 1052030-1
SHEET 1 OF 1 REV A