MICRO SWITCH
A DIVISION OF MINNEAPOLIS-HONEYWELL REGULATOR COMPANY
FREEPORT, ILLINOIS
FED. MFR. CODE 91929

PACKET

CATALOG LISTING
9PA47

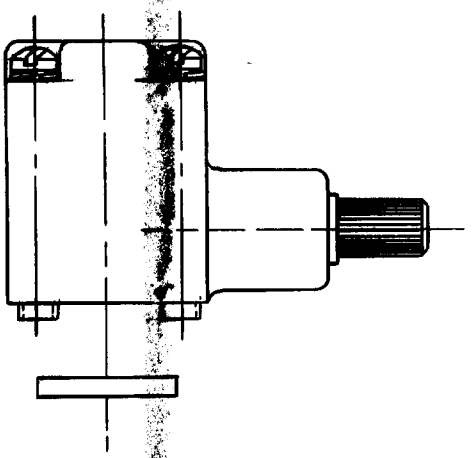

NOTE —
1 – SEAL RING FURNISHED UNASSEMBLED WITH PACKET

THIS DRAWING COVERS A PROPRIETARY ITEM AND IS THE PROPERTY OF MICRO SWITCH, A DIVISION OF MINNEAPOLIS-HONEYWELL REGULATOR CO. THIS DRAWING IS NOT TO BE COPIED OR USED WITHOUT THE APPROVAL OF MICRO SWITCH.

CHARACTERISTICS	ELECTRICAL DATA	
	CONTACT ARRANGEMENT	BREAK DISTANCE

SCALE FULL
DO NOT SCALE PRINT

UNLESS OTHERWISE SPECIFIED
DIMENSIONS ARE IN INCHES
TOLERANCES ARE:

ONE PLACE	(.0)	±.030
TWO PLACE	(.00)	±.015
THREE PLACE	(.000)	±.005
ANGLES		±

WEIGHT

DRAWN	KLB	1 NOV 61	
CHECK	DAW	2 Nov 61	
CHECK	EAS	2 Nov 61	
CHECK			

REPLACES
RELEASE NO. SR 9921
DRAWING NUMBER M 9PA47
ISSUE X 2

REVISIONS
A CO 22517 M B F 20 FEB 67

FO-50378