THIS DRAWING IS UNPUBLISHED. RELEASED FOR PUBLICATION 2009
© COPYRIGHT 2009 BY - ALL RIGHTS RESERVED.

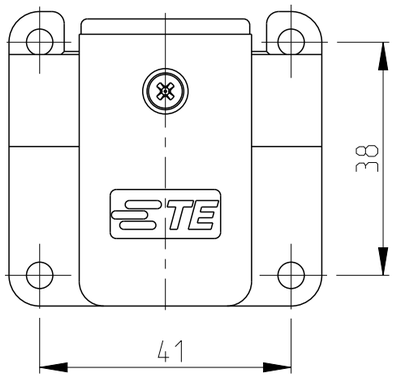

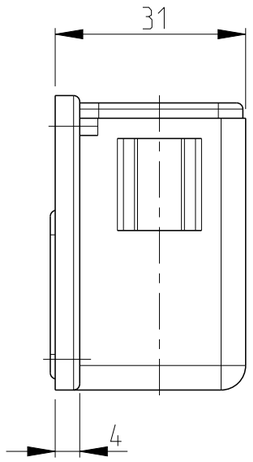

PN 1-5 AS SHOWN

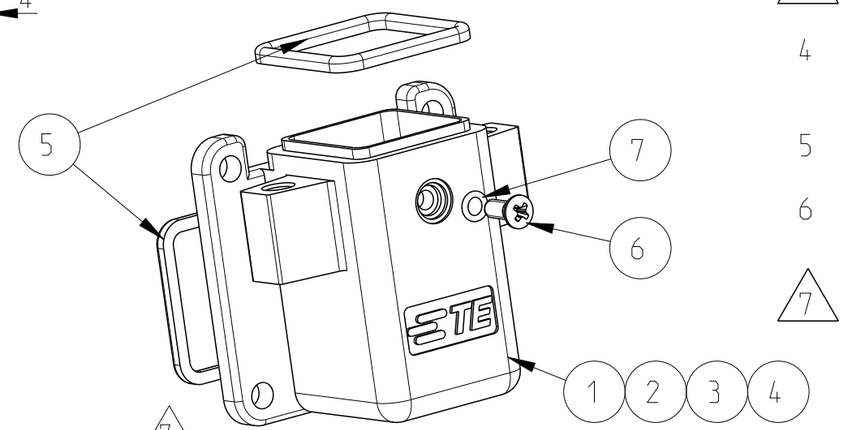

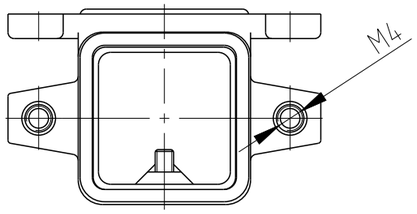

PANEL-CUT-OUT

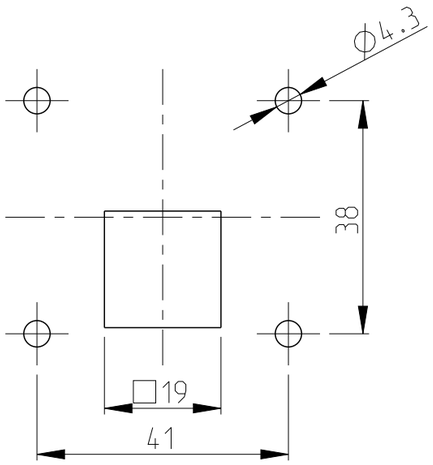

REVISIONS

P	LTR	DESCRIPTION	DATE	DWN	APVD
	A6	ECR-09-023155	22OCT2009	VG	AR
	A7	REVISED PER ECO-09-024717	06NOV09	KK	AEG
	B	ECR-16-001983	18MAY2016	GCM	JB
	C	ECR-16-014579	25APR2017	GCM	JB

Notes

1 SUITABLE HOUSINGS: SERIES HIP, SIZE 1
CUSTOMER DRAWING 1102600, 1106408, 1106200

2 STANDARDS:
DIN EN 61984, DIN EN 60664-1

3 PN 0-3 WITHOUT PROFILE SEAL ON CONNECTING SIDE

4 TOOL:
PHILLIPS SCREWDRIVER PH1.

5 VARNISH ON INSIDE AREA NOT NECESSARY

6 PACKAGING:
10 SETS IN A CARTON.

7 OBSOLETE PARTS: OBSOLETE CIS STREAMLINING PER D.RENAUD/D.SINISI

	PART NO.	ORDERING TEXT
	0-1102602-3	HIP-K.3/4.SGF.SO
7 OBSOLETE	~~0-1102602-1~~	HIP-K.3/4.SGF-GELB
	2-1102602-5	HIP-K.3/4.SGF
	1-1102602-5	HIP.3/4.SGF

PARTS LIST (PER ONE UNIT)

PN/QTY 0-3	0-1 (3, 7 OBSOLETE)	2-5	1-5	DESCRIPTION	MATERIAL	COLOR/SURFACE	NOTE	ITEM
1	1	1	1	O - RING	NBR	BLACK	3.0x1.0	7
1	1	1	1	SCREW COUNTERSUNK RAISED HEAD	STAINL. STEEL V2A	-	M3x8 PH1 DIN EN ISO 7047	6
1	2	2	2	PROFILE SEAL	FKM	BLACK	SERIES EMV / HIP	5
-	1	-	-	ANGLED BULKHEAD HOUSING	ALU	YELLOW	SERIES HIP-K	3
1	-	1	-	ANGLED BULKHEAD HOUSING	ALU	BLACK	SERIES HIP-K	2
-	-	-	1	ANGLED BULKHEAD HOUSING	ALU	GREY	SERIES HIP	1

THIS DRAWING IS A CONTROLLED DOCUMENT.

DIMENSIONS: mm

TOLERANCES UNLESS OTHERWISE SPECIFIED:
0 PLC ±-
1 PLC ±-
2 PLC ±-
3 PLC ±-
4 PLC ±-
ANGLES ±1°

MATERIAL -

FINISH -

DWN V.GLUMM 19AUG2009
CHK H.Braun 19AUG2009
APVD T.Schnurpfeil 19AUG2009
PRODUCT SPEC -
APPLICATION SPEC -
WEIGHT -

TE Connectivity

NAME
ANGLED BULKHEAD HOUSING ASS'Y
BOTTOM ENTRY, SERIES HIP, SIZE 1

SIZE	CAGE CODE	DRAWING NO	RESTRICTED TO
A3	00779	C-1102602	-

CUSTOMER DRAWING | SCALE 1:1 | SHEET 1 OF 1 | REV C

1470-19 (3/13)