MARKETING SALES DRAWING

DIMENSIONS IN INCHES - DO NOT SCALE THIS DRAWING
DIMENSIONS IN METRIC - [ ]

This drawing is the property of Tusonix, Inc., and may not be used, reproduced, published or disclosed to others without expressed authorization by Tusonix Inc.

Electrical Testing per Tusonix standard test plans and Mil-Std-202 Test Methods.

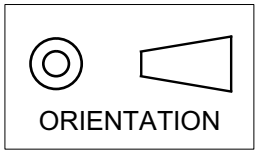

CIRCUIT

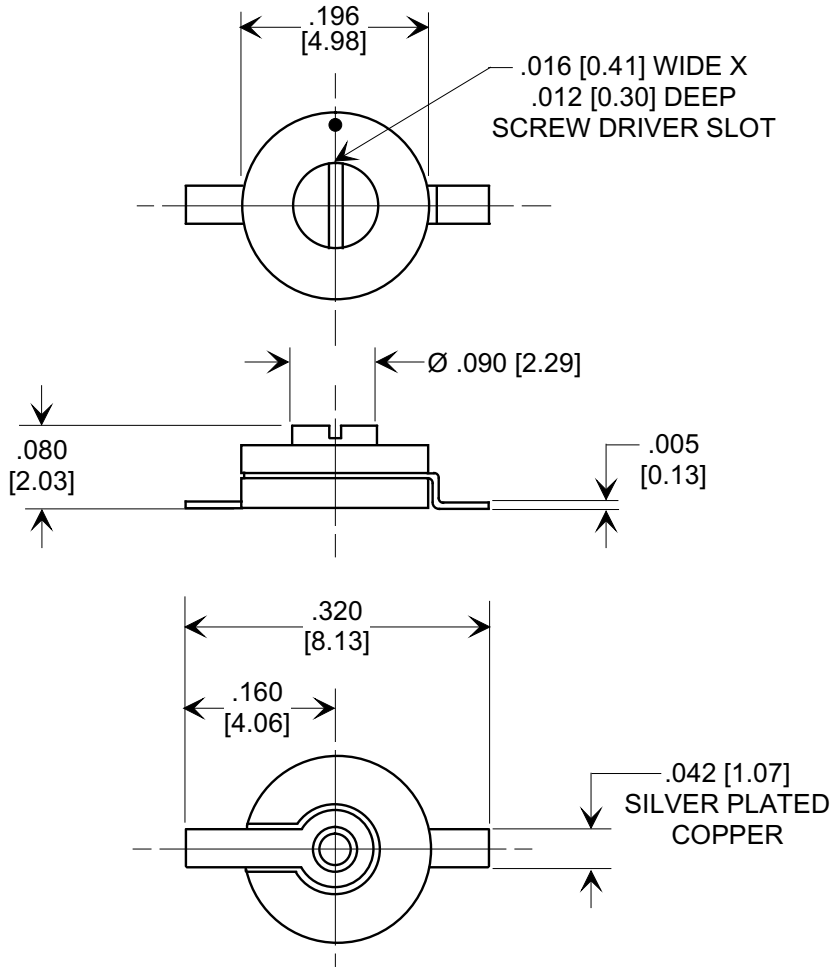

SPECIFICATIONS	
Tusonix Style.	513 - 012
Value:	2.0 - 10 pF
Value Tol.:	MIN. +10%, MAX. -10% +100%
Rating:	100 VDC
Diel. Code:	A (NP0)
Operating Range:	-55°C TO + 85°C
To Tusonix Spec Unless Stated Otherwise	

NOTES:

1. TUSONIX STANDARD PART NUMBER: 513-012 A 2.0-10.
   TUSONIX RoHS COMPLIANT PART NUMBER: 513-012 A 2.0-10 LF.
   CUSTOMER MUST SPECIFY STANDARD OR RoHS PART NUMBER WHEN ORDERING.
2. TERMINALS AND ROTOR ARE COPPER ALLOY RoHS COMPLIANT MATERIALS WITH SILVER PLATING.
3. PART MARKING: TUSONIX TRADEMARK, CAPACITANCE RANGE AND DIELECTRIC TYPE CODE:
   STANDARD PART: BLACK INK.
   RoHS PART: DARK GREEN INK.
4. DIMENSION TOLERANCES

   $\leq$ .125" [3.18] = ±.005 [0.13]

   $\geq$ .126" [3.20] = ±.015 [0.38].

REVISION RECORD	
A	Original Release C.O. ECO-785

X-2015 Rev-0

TOLERANCES unless otherwise specified
2 PLC. DECIMAL ±
3 PLC. DECIMAL ±
ANGLES ±

TUSONIX
TUCSON, ARIZONA

Title
LOW PROFILE CERAMIC TRIMMER

Drawn L.E. 06-04-09
Scale 5 X
Approved R.L. 06-04-09

A **513-012 A 2.0-10**