REVISIONS			
REV	DESCRIPTION	DATE	APPROVED
01_2	REVISED	JBJ 9/21/95	DCam 5/21/96

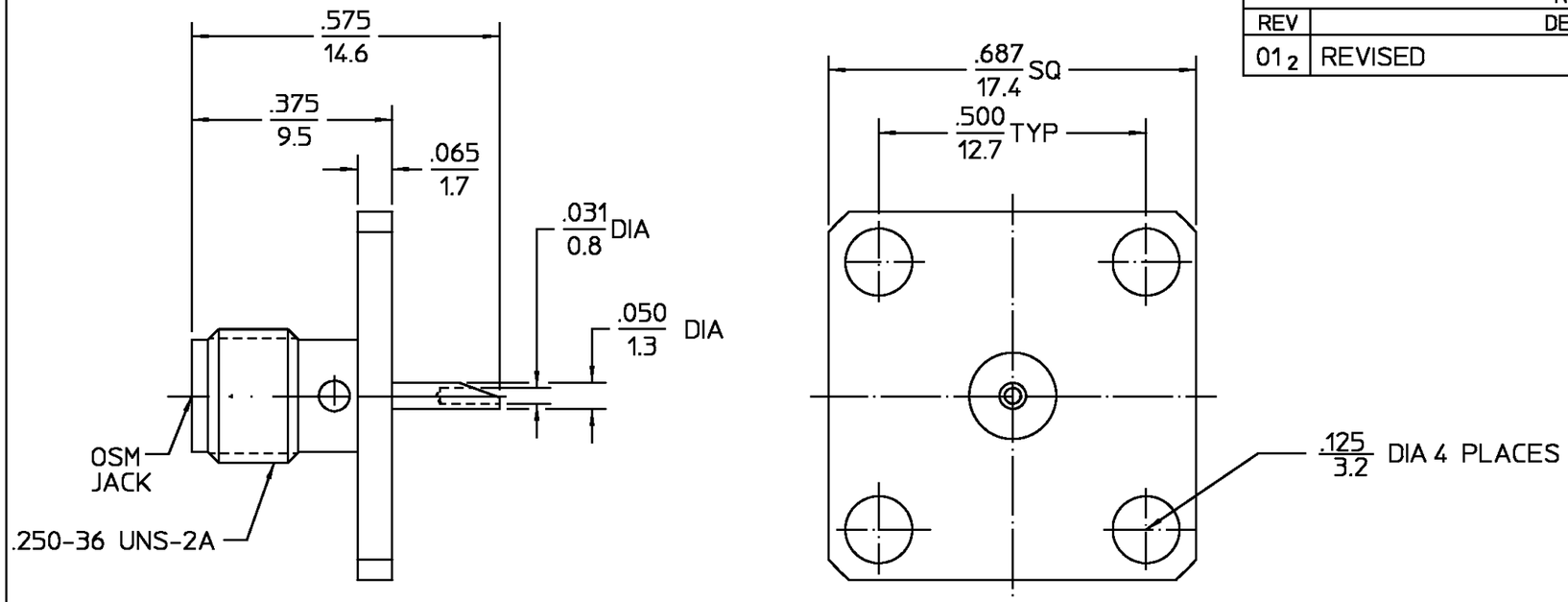

ELECTRICAL	
Nominal Impedance (Ohms)	50
Frequency Range (GHz) DC to	12.4
Volt Rating (VRMS MAX)	
@ Sea Level	335
VSWR	N/A
Insertion Loss (dB MAX)	N/A
RF Leakage (dB MIN)	N/A
Corona, 70,000 Ft (VRMS MIN)	250
Dielectric Withstanding Voltage	
(VRMS MIN) @ Sea Level	1,000
Contact Resistance (Milliohms MAX)	
Center Contact	3.0
Outer Contact	2.0
Cable to Housing	N/A
RF High Potential @ Sea Level	
(VRMS MIN @ 5 MHz)	670
I.R.(Megohms MIN)	10,000

MECHANICAL	
Interface Dimensions MIL-STD-348A,	
Fig.	310.2
Recommended Mating	
Torque	7-10 in-lbs.
Mating Characteristics:	
Insertion (MAX Lbs)	3.0
Withdrawal (MIN Oz)	1.0
Force to Engage and	
Disengage (In-Lbs MAX)	2.0
Center Contact Captivation	
Axial (Lbs)	6.0
Radial (In-Oz)	4.0
Cable Retention	
Axial Force (Lbs)	N/A
Torque (In-Oz)	N/A
Weight (Grams)	TBD

ENVIRONMENTAL
Temperature Rating -65°C to +125°C
Vibration MIL-STD-202, Method 204, Condition B.
Shock MIL-STD-202, Method 213, Condition I.
Thermal Shock MIL-STD-202, Method 107B, Condition B
Moisture Resistance MIL-STD-202, Method 106
Corrosion - MIL-STD-202, Method 101, Condition B, 5% salt spray

COMPONENT	MATERIAL	FINISH
HOUSING	STAINLESS STEEL PER ASTM-A484 AND ASTM-A582, TYPE 303	PASSIVATE PER QQ-P-35
DIELECTRIC	TFE FLUOROCARBON PER ASTM-D-1457	N/A
CENTER CONTACT	BERYLLIUM COPPER PER ASTM B 196 OR ASTM B-197 ALLOY C17300, CONDITION H	GOLD PLATE PER MIL-G-45204

UNLESS OTHERWISE SPECIFIED DIMENSIONS ARE IN INCHES
TOLERANCE ON
GEN. TOL. ±.005 ANGLES ± 1°

DRAWN BY	BWG	DATE 3/11/68
CHECKED BY	PRB	3/11/68
APP'D BY	DN	4/5/68

AMP

AMP Incorporated
140 Fourth Avenue
Waltham, MA 02451-7599

These drawings and specifications are the property of M/A-COM and shall not be reproduced or copied or used in whole or in part as the basis for the manufacture or sale of item(s) without written permission.

.XXX = in
XX.X = mm

TITLE OSM FLANGE MOUNT JACK RECEPTACLE SOLDER POT TERMINAL

SIZE	CODE IDENT NO.		REV
B	26805	2052-5085-02	01_2
SCALE 4:1			SHEET 1 OF 1

CUSTOMER DRAWING

AMP PART # 1052874-1
SHEET 1 OF 1 REV A