DATE	REV	ECN	APP'D. BY
2-14-19	A0	-	BTS

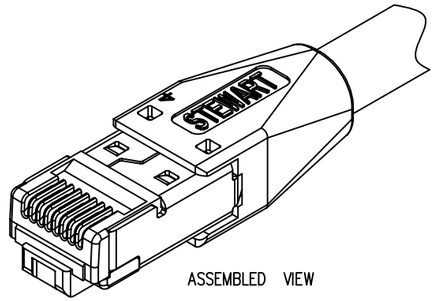

ASSEMBLED VIEW

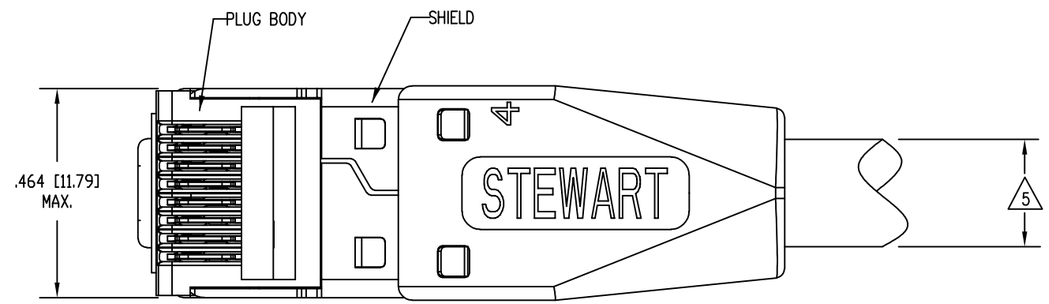

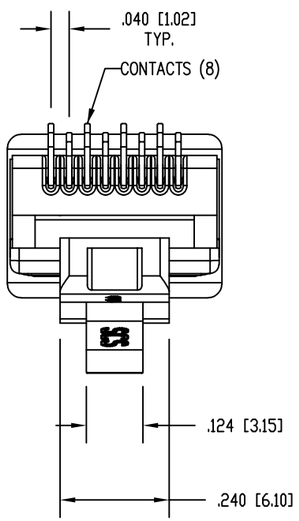

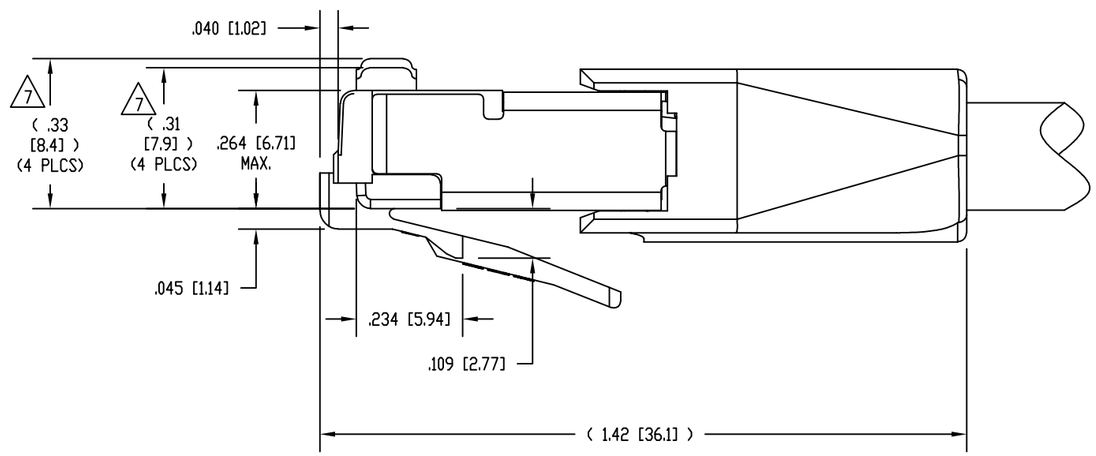

NOTES:

1. PLUG KIT CONSISTS OF:
   PRE-INSERTED PLUG BODY WITH SHIELD
   LOAD BAR
   BOOT

2. MATERIALS:
   PLUG BODY AND LOAD BAR: CLEAR POLYCARBONATE, UL 94-V0
   BOOT: BLACK POLYCARBONATE, UL 94-V0
   CONTACTS: COPPER ALLOY, SELECTIVE GOLD PLATING
   SHIELD: COPPER ALLOY, NICKEL PLATE

3. FOR PRODUCT SPECIFICATION SEE PR026-01.

4. CONTACTS TERMINATE SOLID OR STRANDED CONDUCTORS BETWEEN .056 [1.42] TO .062 [1.57] OUTSIDE DIAMETER OF INSULATION.

5. CABLES WITH OUTSIDE NOMINAL DIAMETERS OF.270 [6.86] TO .295 [7.49].

6. DIMENSIONS AND TOLERANCES COMPLY WITH TIA-1096 STANDARD FORMERLY FCC/CFR 47, PART 68.

7. CONTACT HEIGHT BEFORE TERMINATION.
   AFTER TERMINATION, THE CONTACT HEIGHT IS .237 [6.02] ±.005 [0.13].

8. PRODUCT DESIGNED FOR CATEGORY 6 AND 6A APPLICATIONS.

9. PLUG KIT CONSISTS OF 1 EACH SHIELDED PLUG BODY, LOAD BAR, WIRE ALIGNER, AND BOOT, PACKED IN ZIPPER BAG.

BULK	50 MICRO-INCHES [1.27um]	SS-39200-091
BAGGED 9	50 MICRO-INCHES [1.27um]	SS-39200-090
PACKAGING	CONTACT PLATING IN MATING AREA	PART NUMBER

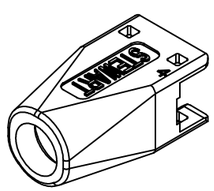

BOOT
39200-925

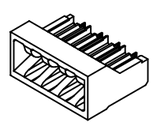

LOAD BAR
39200-933

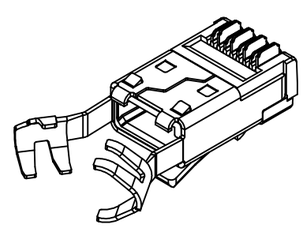

PRE-INSERTED PLUG
BODY WITH SHIELD
39200-321

RoHS

THIRD ANGLE PROJECTION

stewart CONNECTOR
a bel group
11118 Susquehanna Trail South
Glen Rock, PA 17327-9199
(717) 235-7512
http://www.stewartconnector.com

DO NOT SCALE DRAWING
DRAWING IS SUBJECT TO CHANGE WITHOUT NOTICE
DIMENSIONS: INCHES [METRIC]
UNLESS OTHERWISE SPECIFIED TOLERANCES ARE ±.005 [0.13] ANGLES ARE ± 1°
SHEET NO. 1 OF 1

TITLE: 8 CONDUCTOR, 8 POSITION SHIELDED PLUG, WITH LOAD BAR, .062 MAX DIA WIRE, .295 MAX CABLE

THIS DRAWING AND THE SUBJECT MATTER SHOWN THEREON ARE CONFIDENTIAL AND THE PROPRIETARY PROPERTY OF STEWART CONNECTOR AND SHALL NOT BE REPRODUCED, COPIED, OR USED IN ANY MANNER WITHOUT PRIOR WRITTEN CONSENT OF STEWART CONNECTOR. THIS PRODUCT MAY BE PROTECTED BY ONE OR MORE OF THE FOLLOWING US PATENTS: 5628647 6402559 6409535 6524128 7753717 8033863 OTHER PATENTS MAY BE PENDING.

DRN BY:	BTS	DATE	02-12-19
APPD BY:	JME	DATE	02-14-19
DWG NO.	CT390215	REV.	A0

AutoCAD