THIS DRAWING IS UNPUBLISHED. RELEASED FOR PUBLICATION – , – .
© COPYRIGHT – By – ALL RIGHTS RESERVED.

LOC	DIST
AD	00

REVISIONS

P	LTR	DESCRIPTION	DATE	DWN	APVD
	C4	REVISED PER ECO-14-002693	01MAR2014	NK	RH

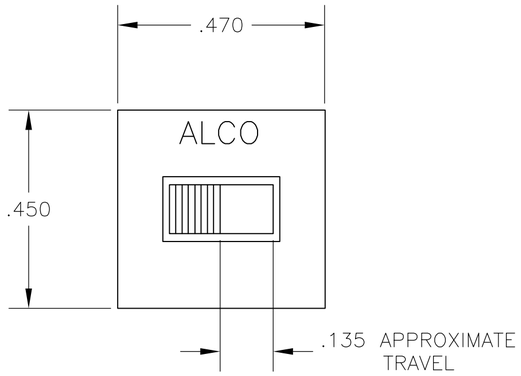

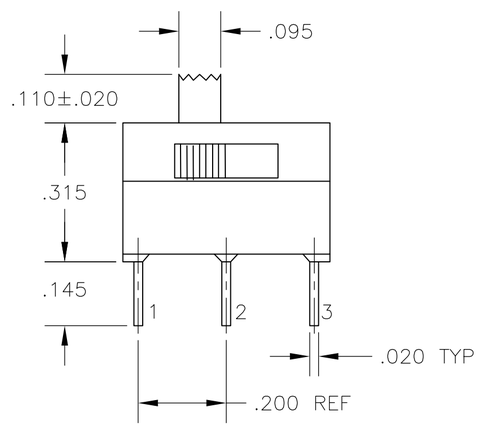

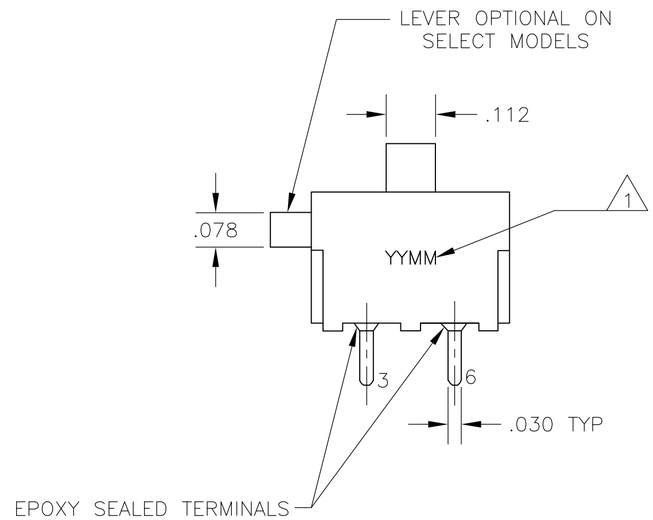

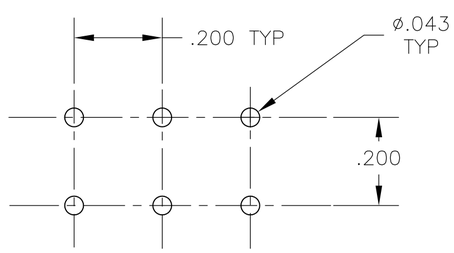

RECOMMENDED HOLE LAYOUT
TOLERANCE ±.002 UNLESS OTHERWISE NOTED

SPECIFICATIONS:

BREAK–BEFORE–MAKE

MATERIAL:
SLIDER, GLASS FILLED NYLON, UL94–HB, BLACK.
BASE, GLASS FILLED PBT, BLUE.
COVER, GLASSED FILLED PBT, BLUE.
SLIDE PLATE, STAINLESS STEEL.
ACTUATOR, PPS, BLACK.
ROCKER CONTACT(GOLD), COPPER ALLOY, GOLD OVER NICKEL PLATING.
ROCKER CONTACT(SILVER), COPPER ALLOY PLUS COINED SILVER.
FIXED CONTACT/TERMINAL (GOLD), COPPER ALLOY, GOLD OVER NICKEL PLATE.
FIXED CONTACT/TERMINAL(SILVER), COPPER ALLOY PLUS COINED SILVER, GOLD OVER NICKEL PLATE.

ELECTRICAL:
CONTACT RATING(SILVER)–3A@115V AC OR 1.5A@230V AC
CONTACT RATING(GOLD)–.4VA MAX@20V DC OR PEAK AC
INITIAL CONTACT RESISTANCE–20 MILLIOHMS MAX.
INSULATION RESISTANCE–1,000 MEGOHMS MIN @ 500V DC
DIELECTRIC STRENGTH– 500 V RMS @ SEA LEVEL.
LIFE EXPECTANCY– 30,000 OPERATIONS.

MECHANICAL:
OPERATING FORCE– 600+/–300 GRAMS.
TRAVEL–.120

ENVIRONMENTAL:
OPERATING TEMPERATURE– –20°C TO +65°C
STORAGE TEMPERATURE– –40°C TO +100°C
SOLDER HEAT RESISTANCE– PER 109–202 CONDITION B.
SOLDERABILITY PER EIA 364–52, CLASS 2, CATAGORY 1.

1 DATE CODE MARKING YYMM (YEAR, MONTH).

2,1 & 5,4	NONE	2,3 & 5,6	DPDT	SILVER	MSSA214N04	5–1437580–2
2,1 & 5,4	OFF	2,3 & 5,6	DPDT	GOLD	MSSA211PG04	5–1437580–1
2,1 & 5,4	NONE	2,3 & 5,6	DPDT	GOLD	MSSA211NGRA04	5–1437580–0
2,1 & 5,4	NONE	2,3 & 5,6	DPDT	GOLD	MSSA211NG04	4–1437580–9
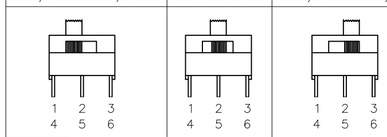			TYPE	PLATING	ALCO PART NO.	PART NO.

THIS DRAWING IS A CONTROLLED DOCUMENT.

DIMENSIONS: INCHES

TOLERANCES UNLESS OTHERWISE SPECIFIED:
0 PLC ± –
1 PLC ± –
2 PLC ± –
3 PLC ± .010
4 PLC ± –
ANGLES ± 1°

MATERIAL –
FINISH –

DWN	R BROWN	20APR04
CHK	M SARVER	20APR04
APVD	M SARVER	20APR04
PRODUCT SPEC	—	
APPLICATION SPEC	—	
WEIGHT	—	

TE Connectivity

NAME: SLIDE SWITCH, DP (MSS–211 & 214)

SIZE	CAGE CODE	DRAWING NO	RESTRICTED TO
A2	00779	C–4–1437580–9	—

CUSTOMER DRAWING | SCALE 4:1 | SHEET 1 OF 1 | REV C4

4–1437580–9