AC/DC Power Supplies

TPP 40 Series, 40 Watt

ES 60601-1
UL 60950-1

Features

- High power density 40 W power supply (enclosed / open frame)
- 2 x MOPP Medical safety according to AAMI/ANSI ES 60601-1:2005(R) and IEC/EN 60601-1 3rd edition
- Ready to meet ErP directive, < 0.3 W no load power consumption
- Highest efficiency across full load range
- Protection class II prepared
- Operating up to 5000m altitude
- Adjustable output voltage
- 3-year product warranty

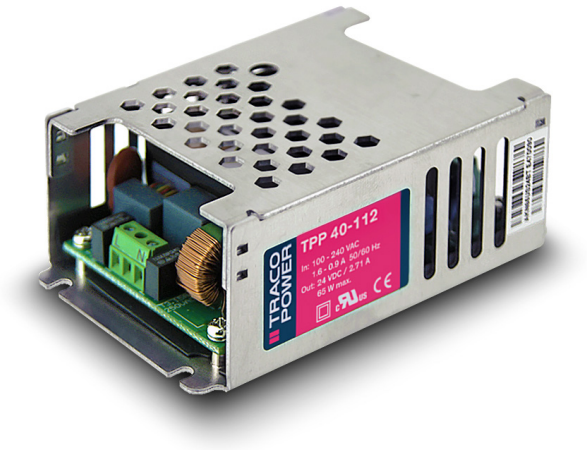

The TPP 40 Series of 40 Watt AC/DC power supplies feature a reinforced double I/O isolation system according to latest medical safety standards (60601-3 3rd edition, 2 x MOPP).
The excellent efficiency of up to 92% allows a high power density for the standard 2.44" x 3.0" packaging format. The full load operating temperature range is –40°C to +70°C while it goes up to 85°C with 50% load derating (for single output models). They come with an active power factor correction and the EMC characteristic is dedicated for applications in industrial and domestic fields.
High reliability is provided by use of industrial quality grade components and an excellent thermal management. It makes the products an ideal solution for medical devices and for demanding safety and space critical applications.

Models

Order code		Output voltage			Output current max.			Efficiency max.
enclosed, screw terminal	open frame, pin connector	Vout 1	Vout 2	Vout 3	Vout 1	Vout 2	Vout 3	
TPP 40-105	TPP 40-105A-J	5 VDC (±10%)	–	–	8.0 A	–	–	90 %
TPP 40-112	TPP 40-112A-J	12 VDC (±10%)	–	–	3.34 A	–	–	92 %
TPP 40-115		15 VDC (±10%)	–	–	2.67 A	–	–	92 %
TPP 40-124	TPP 40-124A-J	24 VDC (±10%)	–	–	1.67 A	–	–	92 %
	TPP 40-148A-J	48 VDC (±10%)	–	–	0.84 A	–	–	92 %
TPP 40-221 [1]		+12 VDC (±10%)	+5 VDC	–	3.34 A	4 A	–	89 %
TPP 40-231 [1]		+15 VDC (±10%)	+5 VDC	–	2.67 A	4 A	–	88.5 %
TPP 40-251 [1]		+24 VDC (±10%)	+5 VDC	–	1.67 A	4 A	–	86 %
TPP 40-321M2 [1]		+12 VDC (±10%)	+5 VDC	–12 VDC	3.34 A	4 A	0.5 A	88 %
TPP 40-331M3 [1]		+15 VDC (±10%)	+5 VDC	–15 VDC	2.67 A	4 A	0.5 A	88 %
TPP 40-3512 [1]		+24 VDC (±10%)	+5 VDC	+12 VDC	1.67 A	4 A	0.5 A	86 %

[1] Total power should not exceed nominal power

Input Specifications

Input voltage range	– AC range (universal input) – DC range	85 – 264 VAC 120 – 370 VDC
Input frequency		47 – 63 Hz
Input current at full load	– at 115 VAC / 230 VAC	1.05 A max. / 0.55 A max.
Input protection		T3.15 A/250 VAC (internal fuse in both line & neutral)
Input inrush current	– at 230 VAC	60A max.
Zero load power consumption		0.15 W max. (acc. ErP directive)

Output Specifications

Voltage set accuracy		single output: multi output:	±1% ±1% Vout1 ±2% Vout2, Vout3
Regulation - single output	– Input variation – Load variation (0 - 100%)	 5 VDC model: other models:	0.2% max. 0.7% max. 0.5% max.
Regulation - multi output	– Input variation – Load variation (0 - 100%) – cross regulation (25% / 100%)	 Vout1: Vout2: Vout3:	0.2% max. 0.5% max. 1.5% max. (0.1W to full load 0.7% max.) 0.7% max. 1.5% max.
Minimum load			not required (Vout3 requires 0.5 W over Vout1/Vout2 to be stabilized)
Temperature coefficient			0.02%/K
Hold-up time	– Vin = 115 VAC		25 ms typ.
Start-up time			<1s
Rise time			20 ms typ.
Ripple and noise - single output (20Mhz Bandwidth)		5-15 VDC models: 24 VDC models: 48 VDC models:	75 mVp-p typ. with cap. 10µF/25V 1206 X7R MLCC 75 mVp-p typ. with cap. 1µF/50V 1206 X7R MLCC 150 mVp-p typ. with cap. 0.1µF/100V 1206 X7R MLCC
Ripple and noise - multi output (20Mhz Bandwidth)	– Vout 1 – Vout 2 – Vout 3	12 VDC model: 15 VDC model: 24 VDC model: all models: 12 VDC model: 15 VDC model:	120 mVp-p typ. with cap. 1µF/50V 1206 X7R MLCC 150 mVp-p typ. with cap. 1µF/50V 1206 X7R MLCC 240 mVp-p typ. with cap. 1µF/50V 1206 X7R MLCC 100 mVp-p typ. with cap. 10µF/25V 1206 X7R MLCC 120 mVp-p typ. with cap. 10µF/25V 1206 X7R MLCC 150 mVp-p typ. with cap. 10µF/25V 1206 X7R MLCC
Overvoltage protection			125 – 140% of nominal Vout
Overload protection by current limit		single output: multi output:	at 145% Iout typ. at 145% Pout1 +Pout2
Short circuit protection			continuous (automatic recovery)
Transiente response (25% load step change)	– Peak deviation – Recovery time	Vout1:	3% of Vout max. 600µs typ.

General Specifications

Operating temperature			–40°C to +85°C with derating, see graph on p.3
Output power derating	– Temperature – Low input voltage	single output: multi output: 	2.67 %/K above +70°C at 230 VAC 2.75 %/K above +65°C at 115 VAC 1.60 %/K above +60°C at 230 VAC 1.67 %/K above +55°C at 115 VAC 1.33 %/V below 100 VAC

All specifications valid at nominal input voltage, full load and +25°C after warm-up time unless otherwise stated.

General Specifications (continued)

Storage temperature		–40°C to +85°C
Humidity (non condensing)		5 – 95 % rel. H max.
Altitude during operation		5000 m
Switching frequency - single output (at 230 VAC)	5 VDC model: other models:	70 kHz typ. (pulse frequency modulation) 120 kHz typ. (pulse frequency modulation)
Switching frequency - multi output (at 230 VAC)	– Vout 1 – Vout 2 – Vout 3	5 VDC model: 70 kHz typ. (pulse frequency modulation) other models: 115 kHz typ. (pulse frequency modulation) 750 kHz typ. (pulse frequency modulation) 510 kHz typ. (pulse frequency modulation)
Isolation voltage 1min (2 x MOPP insulation)	– Input / Output – Input / Case	4000 VAC 2500 VAC
Leakage current (at 264 VAC/60Hz)		75 µA max.
Isolation resistance (at 500 VDC)		100 Mohm min.
Reliability	– calculated MTBF at +25°C acc. to IEC 61709	3'010'000 h for single output models 1'716'000 h for multi output models
Protection class		class II prepared
Electromagnetic compatibility (EMC), emissions	– Conducted input RI suppression – Harmonic current emissions – Voltage flicker – Radiated input surpression	EN 55022, class B IEC / EN 61000-3-2, class A IEC / EN 61000-3-3, (class tba.) EN 55011, class B IEC / EN 60601-1-2 (for medical equipment)
Electromagnets compatibility (EMC), immunity	– Electrostatic discharge ESD – RF field immunity – Electrical fast transients/burst immunity – Surge – Conducted RF – Magnetic field (only for single output models)	IEC / EN 60601-1-2 IEC / EN 61000-4-2, 8kV/6kV perf. criteria A IEC / EN 61000-4-3, 20V/m perf. criteria A IEC / EN 61000-4-4, ± 2kV perf. criteria A IEC / EN 61000-4-5, ± 1kV/± 2kV perf. criteria A IEC / EN 61000-4-6, 20 Vrms perf. criteria A IEC / EN 61000-4-8, 10A/m perf. criteria A
Voltage dip and interruptions according to EN 60601-1-2 reference: 100 VAC / 50Hz		30%, 500ms perf. criteria A 60%, 100ms perf. criteria B > 95%, 10ms perf. criteria A > 95%, 5000ms perf. criteria B
Safety standards and certification www.ul.com File e188913 (pending)		UL 60950-1, IEC/EN 60950-1, IEC/EN 60601-1 3rd edition, ANSI/AAMI ES60601-1:2005(R)2012
Environment	– Vibration acc. IEC 60068-2-6; – Shock acc. IEC 60068-2-27	3 axis, sine sweep, 10–55Hz, 1g, 1oct/min 3 axis, 10g half sine, 11msShock 20 G (3 directions each 3 times)
Environmental compliance	– Reach – RoHS	www.tracopower.com/overview/tpp40 RoHS directive 2011/65/EU
Connection		screw terminal / pin connector

Single output models:

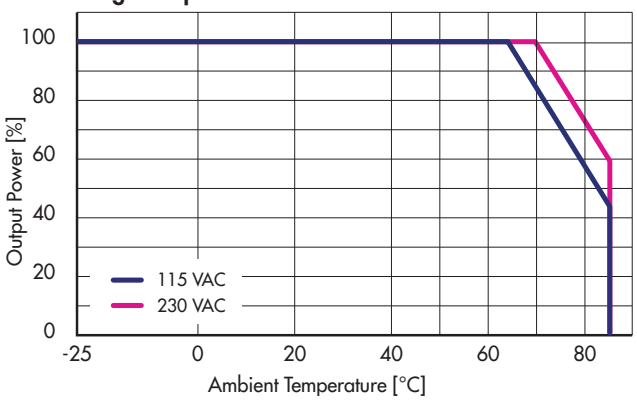

Multi output models:

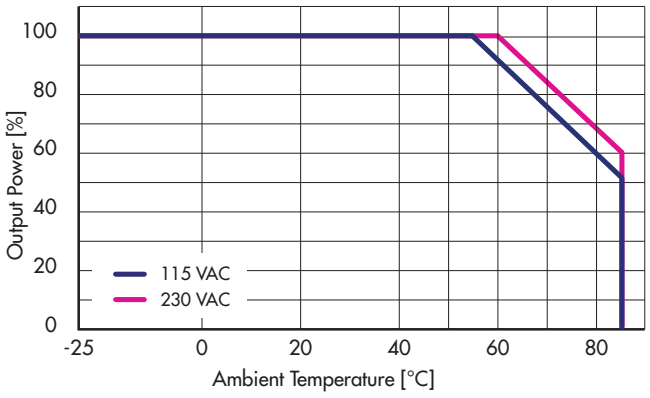

All specifications valid at nominal input voltage, full load and +25°C after warm-up time unless otherwise stated.

Dimensions

Single output:

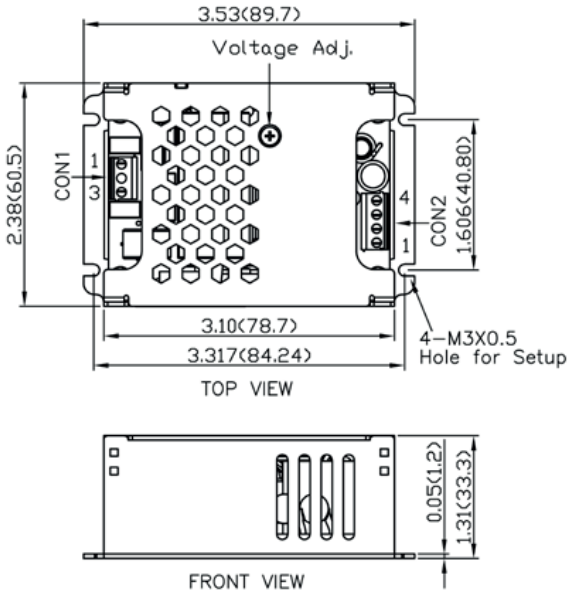

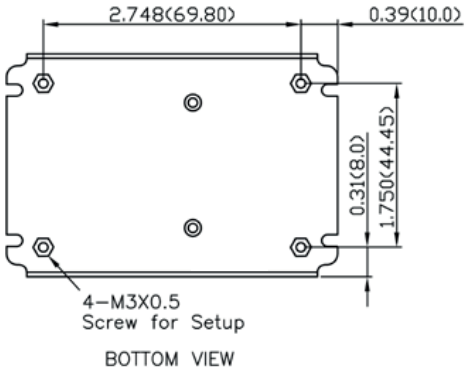

Weight: 169g (5.96 oz)

Screw Terminal			
Input		Output	
Pin	CON 1	Pin*	CON 2
1	Line	1,2	– Vout
3	Neutral	3,4	+ Vout

*Terminal rated for 10 A max.
(at higher current connection has to be split)

Multi output:

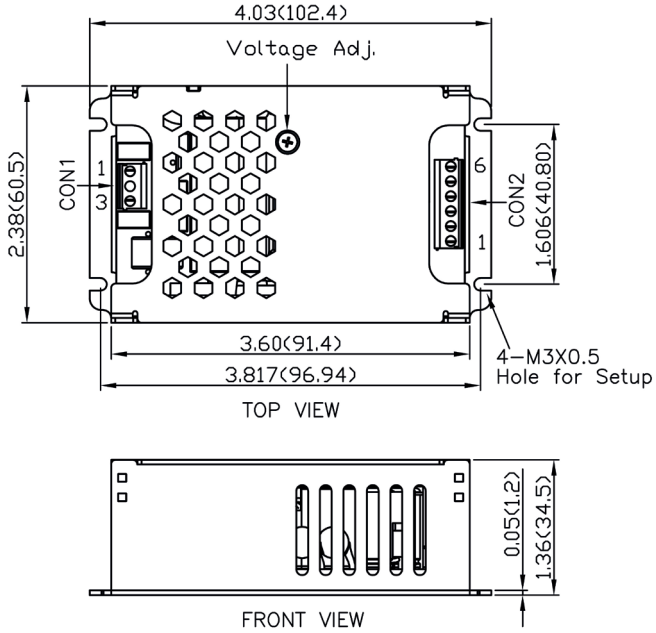

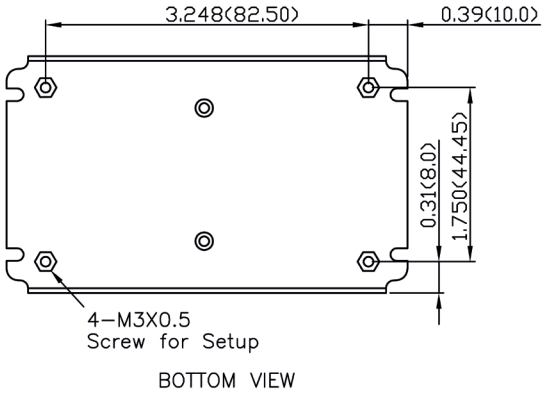

Weight: 216g (7.80 oz)

Screw Terminal			
Input		Output	
Pin	CON 1	Pin*	CON 2
1	Line	1	Vout 3
3	Neutral	2,3	Com
		4,5	Vout 2
		6	Vout 1

*Terminal rated for 10 A max.
(at higher current connection has to be split)

Dimensions in inch, () = mm
Tolerances: x.xx±0.02 (x.x±0.5) x.xxx±0.01 (x.xx±0.25)
Wire dimensions range 26 - 16 AWG
M3×0.5 screw locked torque MAX 5Kgf.cm/0.49N.m
Terminal screw locked torque MAX 2Kgf.cm/0.2N.m

Customized versions on request!

Outline Dimensions

Single output:

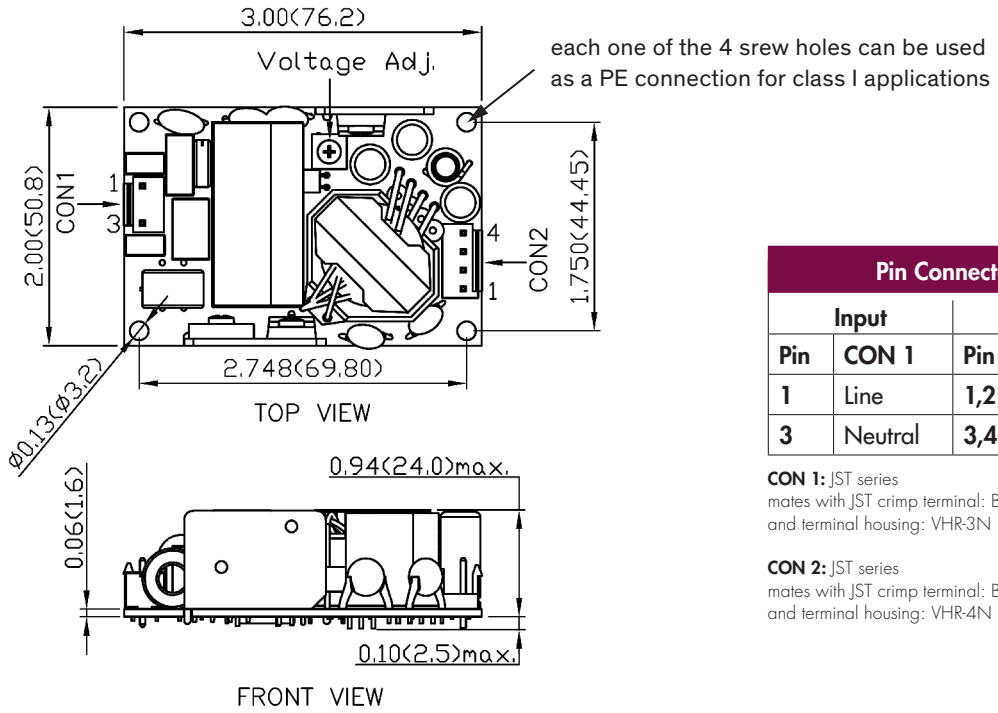

Pin Connector			
Input		Output	
Pin	**CON 1**	**Pin**	**CON 2**
1	Line	**1,2**	– Vout
3	Neutral	**3,4**	+ Vout

CON 1: JST series
mates with JST crimp terminal: BVH-21T-P1.1
and terminal housing: VHR-3N

CON 2: JST series
mates with JST crimp terminal: BVH-21T-P1.1
and terminal housing: VHR-4N

Dimensions in inch, () = mm
Tolerances: x.xx±0.02 (x.x±0.5) x.xxx±0.01 (x.xx±0.25)