REVISIONS				
REV. STA	E.C.O. NUMBER	DESCRIPTION	BY DATE	APP'D DATE
1		ORIGINAL RELEASE	MCS 10/21/94	DE 10/94

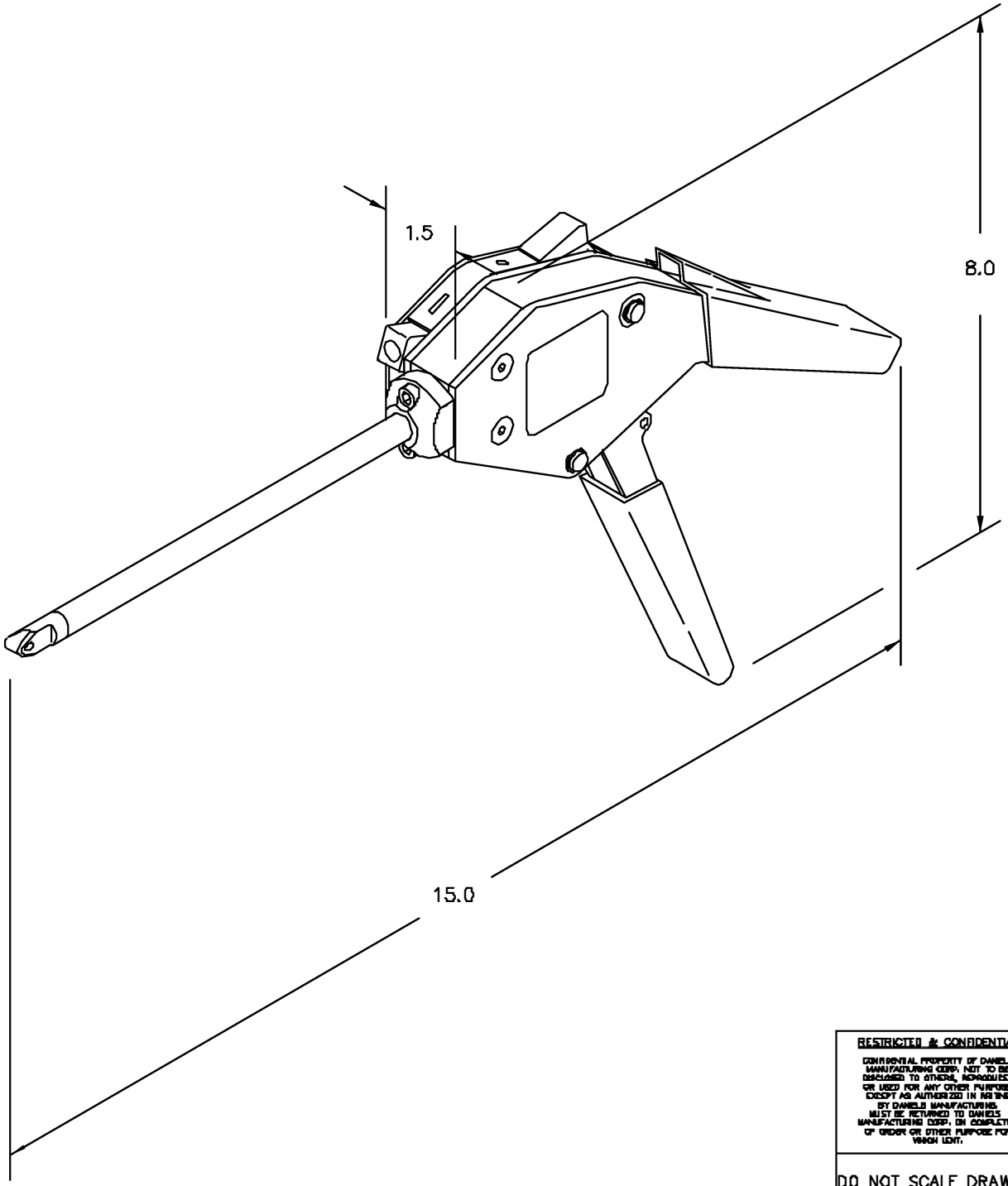

UNCONTROLLED DOCUMENT
WILL NOT BE UPDATED

RESTRICTED & CONFIDENTIAL

CONFIDENTIAL PROPERTY OF DANIELS MANUFACTURING CORP. NOT TO BE DISCLOSED TO OTHERS, REPRODUCED OR USED FOR ANY OTHER PURPOSE EXCEPT AS AUTHORIZED IN WRITING BY DANIELS MANUFACTURING. MUST BE RETURNED TO DANIELS MANUFACTURING CORP. ON COMPLETION OF ORDER OR OTHER PURPOSE FOR WHICH LENT.

DO NOT SCALE DRAWING

MATERIAL

HEAT TREAT

FINISH

ITEM	PART NO.	QTY.	DESCRIPTION/REMARKS

DRN. M.SCRUGGS DATE 10-21-94
CHK'D. DE DATE 10-94
APP'D. DATE
APP'D. DATE

DANIELS MANUFACTURING CORP.
ORLANDO, FLORIDA
CAGE 11651

TITLE
SAFE-T-CABLE APPLICATION TOOL, .032, 7" NOSE ENVELOPE DRAWING

WHERE USED

SIZE	SCALE	CAD P/N	SHEET	OF
C	NTS	SCT327-ENV	1	1

POSTING

P/N SCT327-ENV REV. 1