DATE	DESCRIPTION	REV.
11.16.06	CHANGE AS PER ECN 06–077	B
8.20.15	CHANGE AS PER ECN 15–083	C

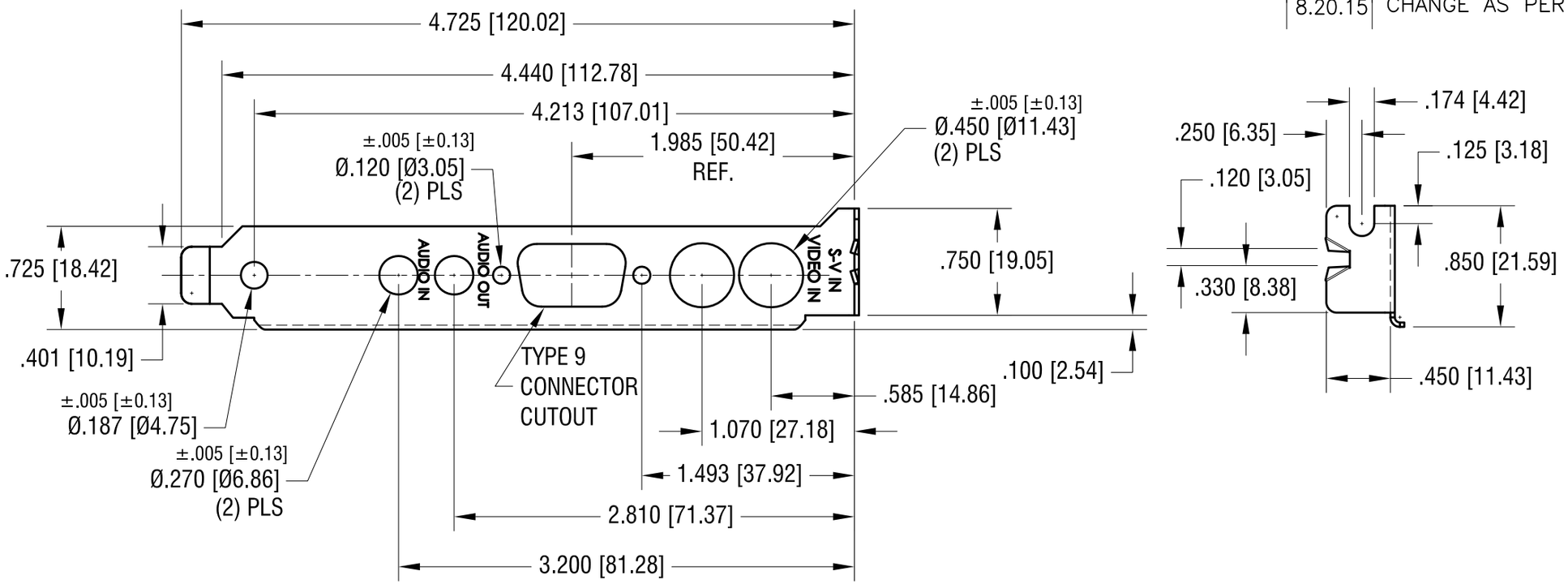

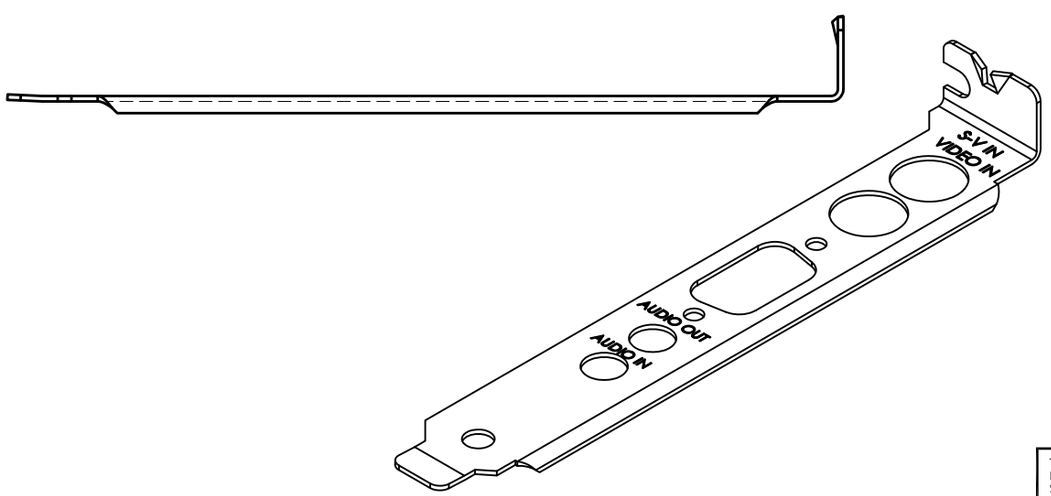

THIS DOCUMENT IS THE PROPERTY OF KEYSTONE ELECTRONICS CORP. AND SHALL NOT BE REPRODUCED, DISTRIBUTED OR USED AS A BASIS FOR MANUFACTURE WITHOUT PRIOR WRITTEN PERMISSION FROM KEYSTONE ELECTRONICS CORP.

KEYSTONE ELECTRONICS CORP.

www.keyelco.com • ASTORIA, N.Y. 11105-2017 • Tel (718) 956-8900

PART NAME: COMPUTER CARD BRACKET

MATERIAL: .031[0.78] TH'K STEEL

FINISH: NICKEL PLATE

DRN BY: BOONE | DATE: 6.15.98

APP'D: LN | SCALE: 1X

TOLERANCES INCH [MM]
DECIMAL ± .015 [± 0.38]
ANGULAR ± 1°
UNLESS OTHERWISE SPECIFIED

CODE: C

DWG NO. 9201-1