Alle Rechte vorbehalten/ *All rights reserved*

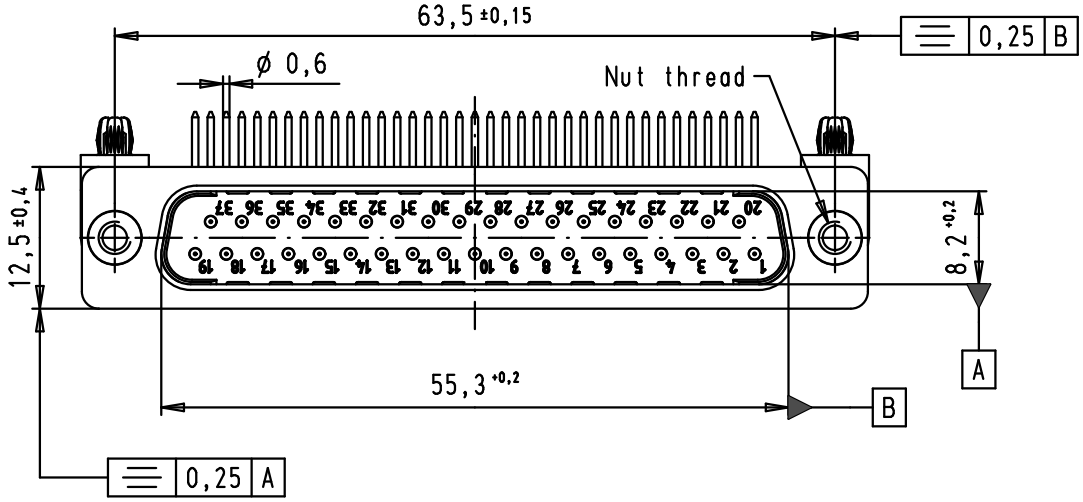

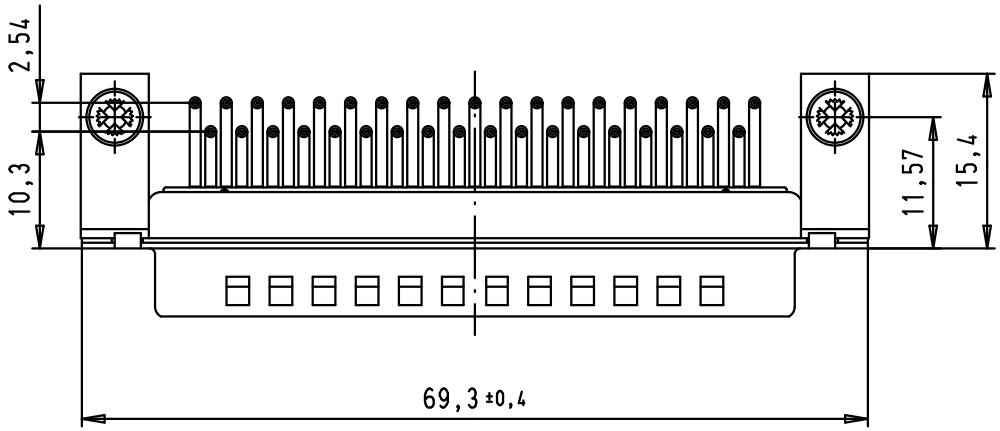

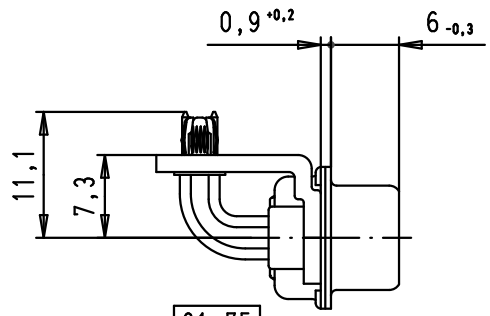

SPECIFICATIONS

Mating cycles	500
Filter type	C
Capacitance	470 pF±20%
Working voltage	100 V
Current rating	7,5 A
Insulation resistance	>1 GΩ

FREQUENCY (MHz)	ATTENUATION (dB)
5	-
10	1
50	10
100	15
500	35
1000	32

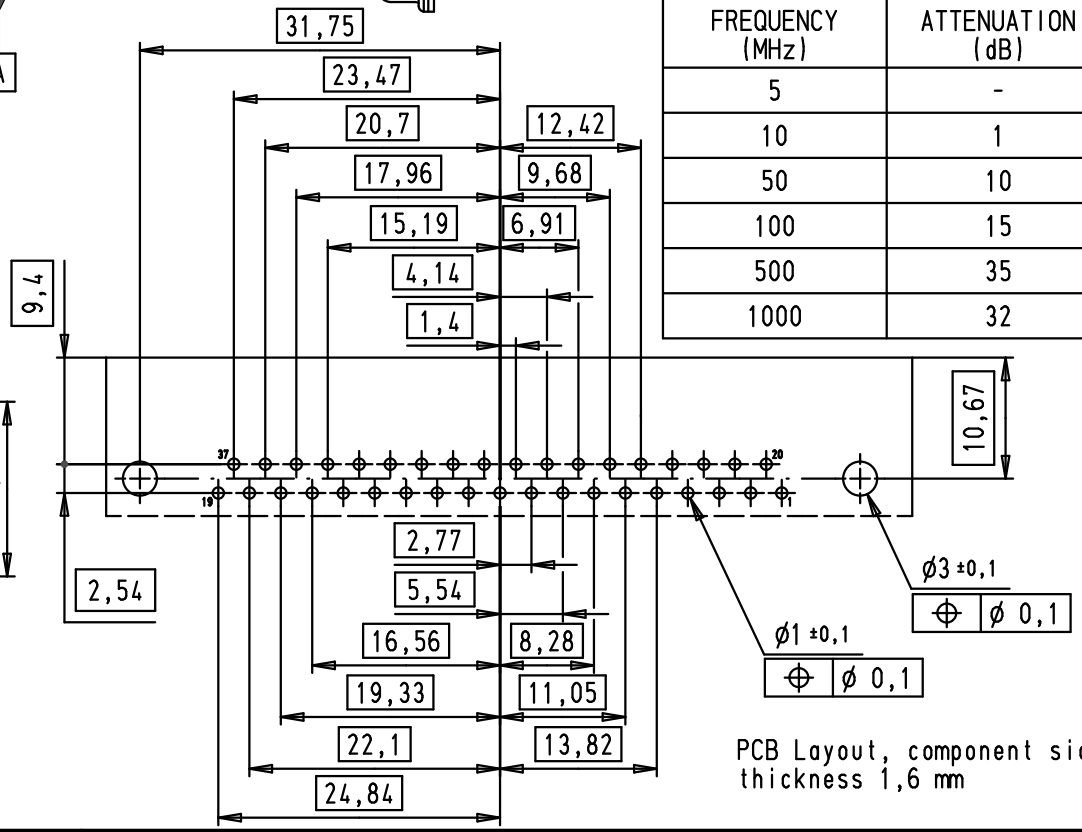

PCB Layout, component side, thickness 1,6 mm

09 64 424 7223	M3
09 64 424 7222	4-40 UNC-2B
Part number	Nut thread

Mod.	Dat.	Name
35300	01/12/08	PK
33800	02/08/06	PK
31058	08/07/02	CV

	Dat.	Name
Detail.	08/07/02	CV
Insp.		
Stand.		

All Dim. in mm
Orig. Size DIN A 4

D-Sub, male, angled, 37 poles, turned solder pins, clinch nuts and brackets with board locks

Maßstab/ *Scale* 1,5:1

HARTING EURL
F-95972 Paris

TB 09 64 424 722X

Sub.

Blatt/ *Page* 1/4