SIGN	DATE	DESCRIPTION	APPROVER
1	2010.03.16	Add the 2p mark	Jacke
2	2010.09.01	The design is changed	Jacke
THIS IS CAD DRAWING, DO NOT REVISE MANUALLY!!!			

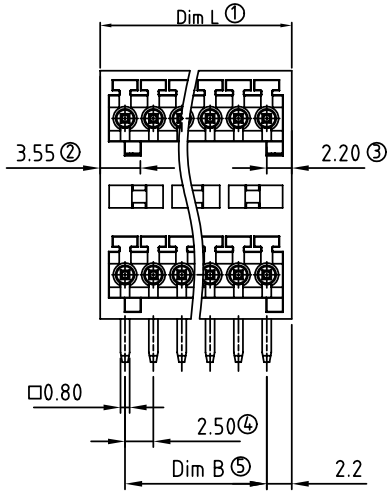

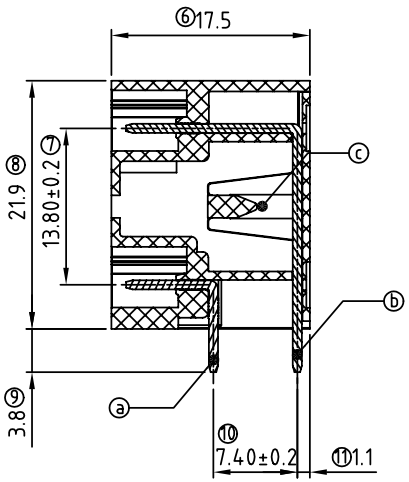

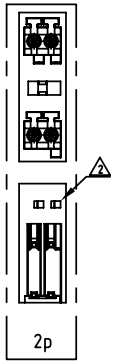

Material

- Item a Contact pin of short: Copper With Tin plated
- Item b Contact pin of long: Copper With Tin plated
- Item c Terminal (housing): Thermoplastic (UL94V-0)

Electrica

- Voltage rating:125V
- Current rating: 4A
- Withstanding Voltage: 1.25KV
- Operating temperature: -40°C to +115°C
- Soldering temperature: 250°C±10°C/5 Sec
- Safeyt Approval: c UL us

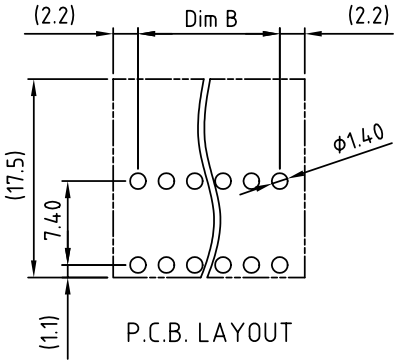

P.C.B. LAYOUT

VLxxB1x1xxxx G

Poles
04 2×02 Contacts
06 2×03 Contacts
: :
48 2×24 Contacts

COLOR
0 Black (RAL9005)
2 Red (RAL3001/D)
3 Orange(RAL2011/P)
4 Yellow(RAL1018/A)
5 Green(RAL6018/T)
6 Blue (RAL5015/A)
8 Grey(RAL7035/D)

0000: "@" Mark
000A: "ANYTEK" Mark
Any special item by customer requst. please contact sales department.

Pb < 40,000ppm (RoHS)

Poles	2×2p	2×3p	2×4p	2×5p	2×6p	2×7p	2×8p	2×9p	2×10p	2×11p	2×12p	2×13p
Dim L	6.90	9.40	11.90	14.40	16.90	19.40	21.90	24.40	26.90	29.40	31.90	34.40
Dim B	2.50	5.00	7.50	10.00	12.50	15.00	17.50	20.00	22.50	25.00	27.50	30.00
TOL	±0.10				±0.15					±0.20		
Poles	2×14p	2×15p	2×16p	2×17p	2×18p	2×19p	2×20p	2×21p	2×22p	2×23p	2×24p	
Dim L	36.90	39.40	41.90	44.40	46.90	49.40	51.90	54.40	56.90	59.40	61.90	
Dim B	32.50	35.00	37.50	40.00	42.50	45.00	47.50	50.00	52.50	55.00	57.5	
TOL	±0.20		±0.25					±0.30				

ANYTEK

CUSTOMER COPY

ALL RIGHTS RESERVED. REPRODUCTION OR ISSUE TO THIRD PARTIES IN ANY FORM WHATEVER IS NOT PERMITTED WITHOUT WRITTEN AUTHORITY FROM THE PROPRIETOR. PROPERTY OF ANYTEK TECHNOLOGY CO., LTD

TITLE	VL 2.5 Series 90°				
PART NO.	VLxxB1x1xxxxG			DWG NO.	8VL0601
APPROVED	CHECKED	DESIGNED	DRAWN	CUST NO.	
		Jacke 2010.09.01	Jacke 2010.03.16	UNIT: mm	
				SCALE: NONE	
				SHEET: 01/01	REV.: D

Tolerance	
X.	±0.5
X.X	±0.3
X.XX	±0.1
X°	±1°