GENERAL CHARACTERISTICS and RoHS INFORMATIONS

see drawing C01-8639-0003

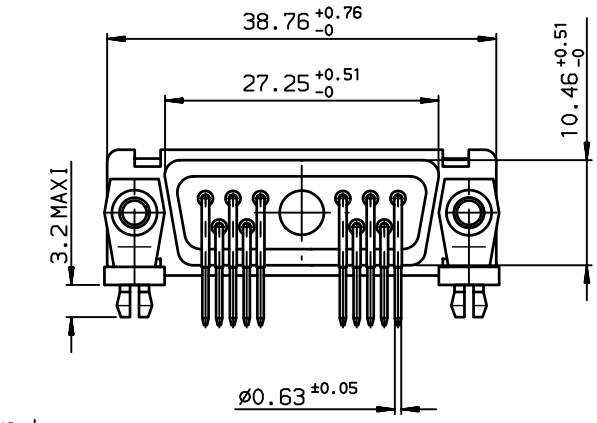

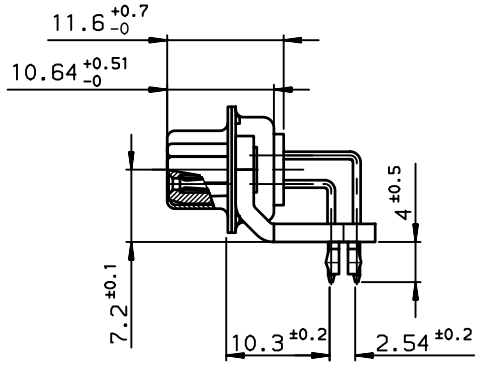

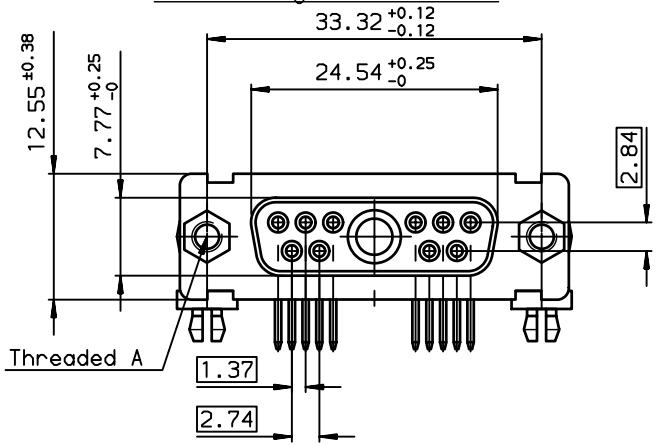

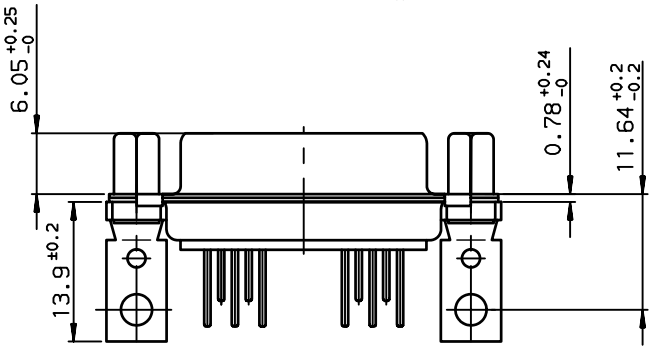

P/N LEAD FREE

DAV11W1S500G00LF	UNC 4.40
PART NUMBER	Threaded A

LAYOUT DIMENSIONS (after plating)

CONNECTOR SIDE VIEW

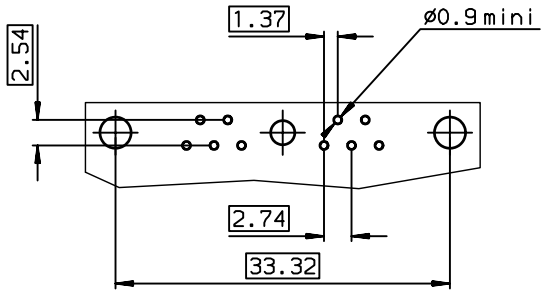

European Views

rev	ecn no	dr	date
A	LS08-0012	MPE	2008/01/16
-	-	-	-
-	-	-	-
-	-	-	-
-	-	-	-
-	-	-	-
-	-	-	-

www.fciconnect.com

surface ISO 1302 | tolerance std ISO 406 ISO 1101 | projection | mm

TOLERANCES UNLESS OTHERWISE SPECIFIED

Dr	M PESSON	2008/01/16	ANGULAR	LINEAR	0.X	±0.1
Eng	PESSON	2008/01/16			0.XX	±0.1
Chr	LEGARE	2008/01/16	0.XX°	±2°	0.XXX	±0.1
Appr	LEGARE	2008/01/16	Product family			D-SUB

size A3 | Scale 2

ECN LS08-0012

Spec ref -

title: SOCKET CONNECTOR 11W1 RA WITHOUT POWERS CONTACTS

dwg no C-8639-2355 | Rev. A

catalog no -

CUSTOMER | sheet 1 of 1

Copyright FCI.