THIS DRAWING IS UNPUBLISHED. RELEASED FOR PUBLICATION 20
© COPYRIGHT 20 BY - ALL RIGHTS RESERVED.

REVISIONS

P	LTR	DESCRIPTION	DATE	DWN	APVD
	C3	REVISED PER ECO-15-010004	13JUL2015	NK	MZ
	D	REVISED PER ECO-16-018352	25MAR2017	RS	MZ

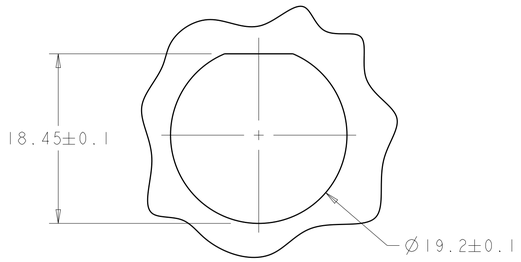

SUGGESTED PANEL CUTOUT 2
SCALE 3:1

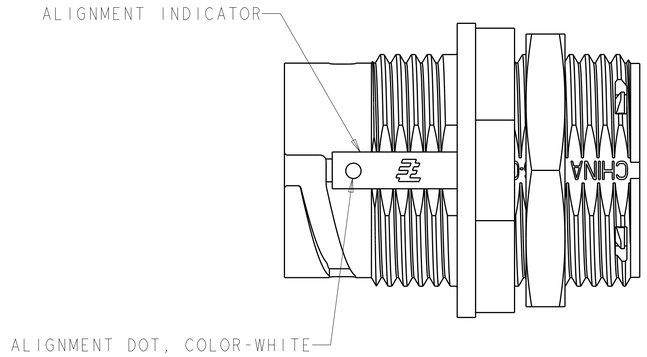

1. CONNECTOR CAN BE FRONT OR REAR PANEL MOUNTED.
2. MAX PANEL THICKNESS - 3.18

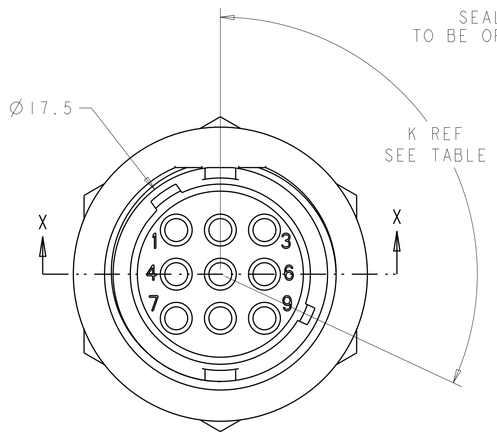

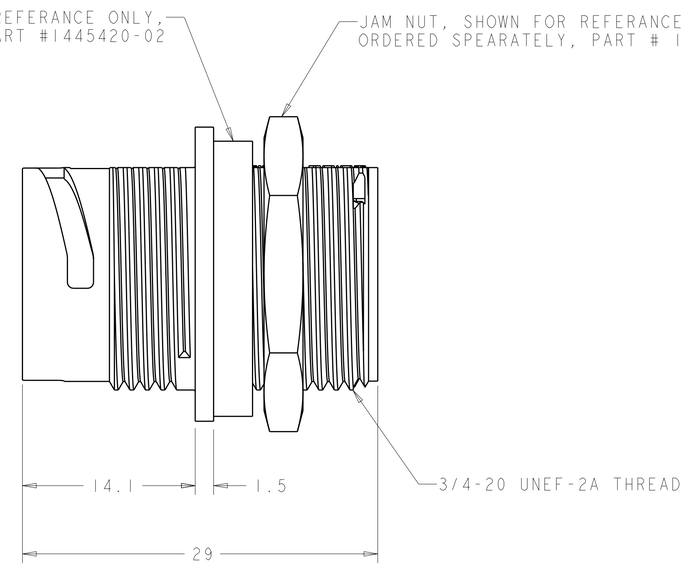

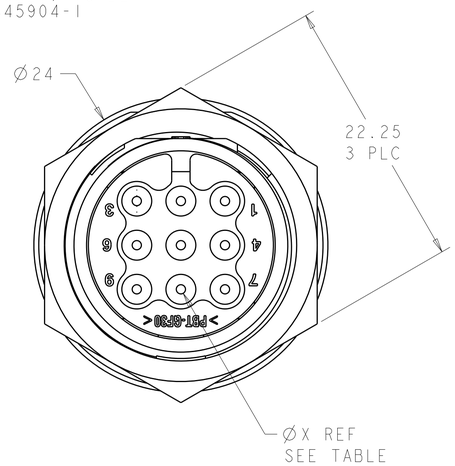

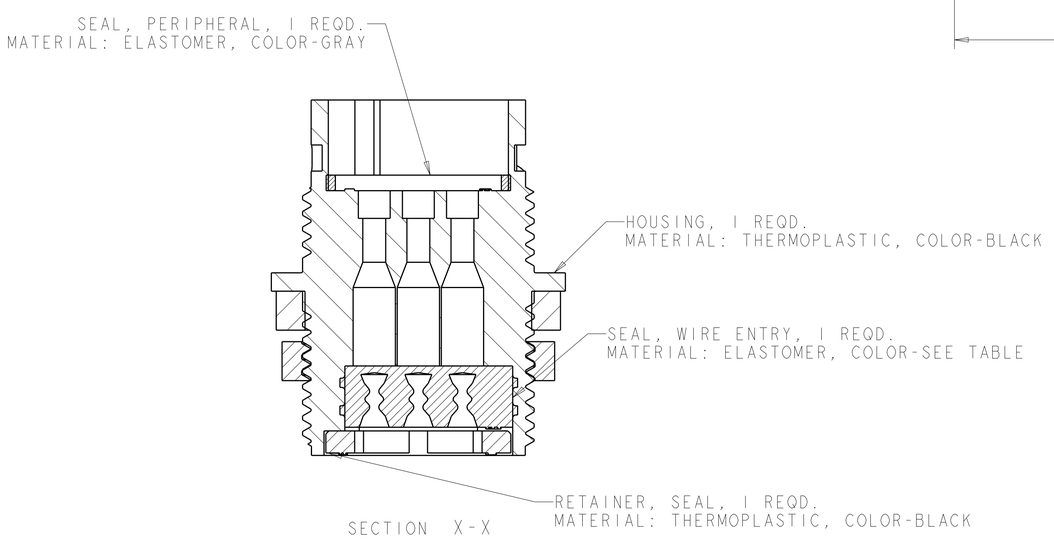

SECTION X-X

OBSOLETE	Ø1.5	135°	B	NATURAL	BROWN	1445816-7
OBSOLETE	Ø0.75	135°	B	YELLOW	RED	1445816-4
	Ø1.5	115°	A	NATURAL	BLACK	1445816-3
OBSOLETE	Ø1.5	135°	B	NATURAL	RED	1445816-2
	Ø0.75	115°	A	YELLOW	BLACK	1445816-1
	ØX REF	K REF	KEYING CODE	WIRE ENTRY SEAL COLOR	HOUSING COLOR	PART NUMBER

THIS DRAWING IS A CONTROLLED DOCUMENT.

DIMENSIONS: mm

TOLERANCES UNLESS OTHERWISE SPECIFIED:
0 PLC ±-
1 PLC ±-
2 PLC ±0.13
3 PLC ±-
4 PLC ±-
ANGLES ±-

MATERIAL: SEE CALLOUT
FINISH: SEE CALLOUT

DWN SHANE WIEST 12OCT2001
CHK G DOUTY 12OCT2001
APVD H.WAKEEM 13JUN2003
PRODUCT SPEC -
APPLICATION SPEC -
WEIGHT -

TE Connectivity

NAME: ASSEMBLY, RECEPTACLE, SIZE 11, 9 POSITION, PANEL MOUNT, SEALED, MINI CPC

SIZE	CAGE CODE	DRAWING NO	RESTRICTED TO
A1	00779	C-1445816	-

CUSTOMER DRAWING SCALE 3:1 SHEET 1 OF 1 REV D

4805 (3/13)