THIS COPY IS PROVIDED ON A RESTRICTED BASIS AND IS NOT TO BE USED IN ANY WAY DETRIMENTAL TO THE INTERESTS OF PANDUIT CORP.

PANDUIT PART NO.	WEIGHT
CFAPPBL1A	4.7 LB/10 PCS (2131.8 g/10 PCS)

NOTES:
1. SEE CURRENT CATALOG FOR COMPLETE LIST OF PARTS APPLICABLE FOR USE WITH THIS PART.
2. THE PATCH PANEL IS DESIGNED FOR MOUNTING TO FMT1A TRAY OR 19" UNIVERSAL RACKS.
3. PACKAGE CONTENTS:
   (1) 1RU PATCH PANEL.
   (1) SCREW KIT (FOUR #12-24 SCREWS).
   (1) SCREW KIT (FOUR M6 SCREWS).
4. DIMENSIONS IN PARENTHESES ARE METRIC.

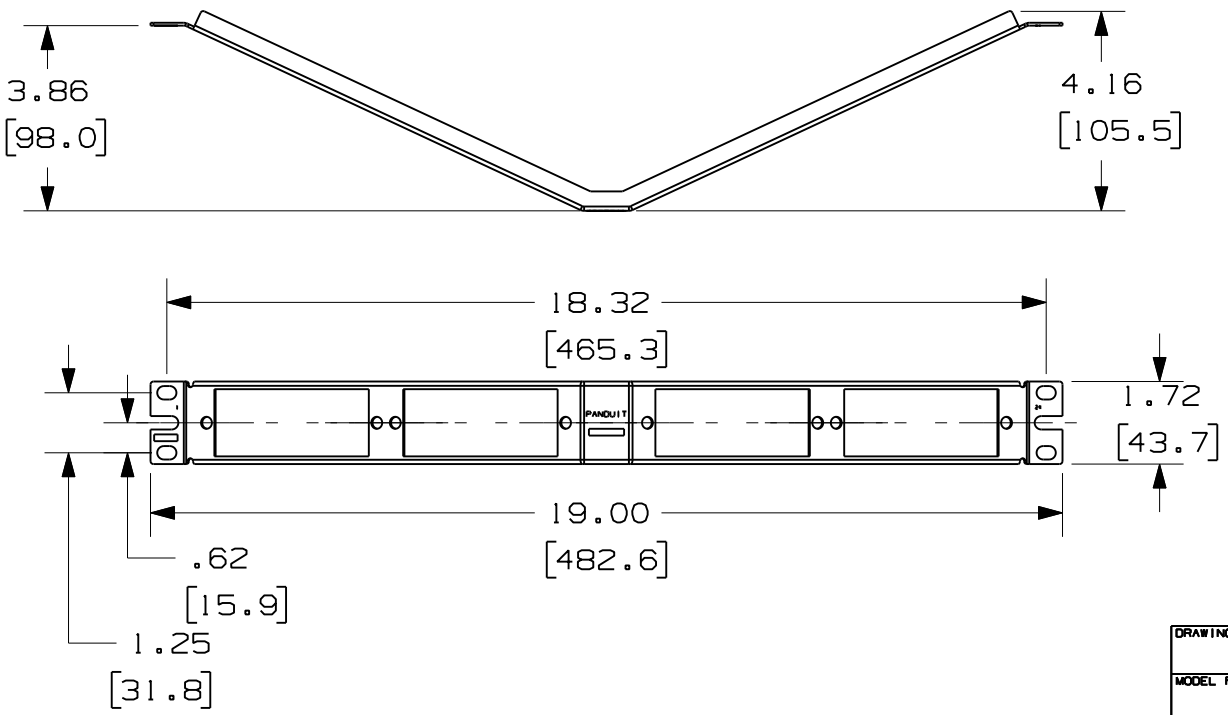

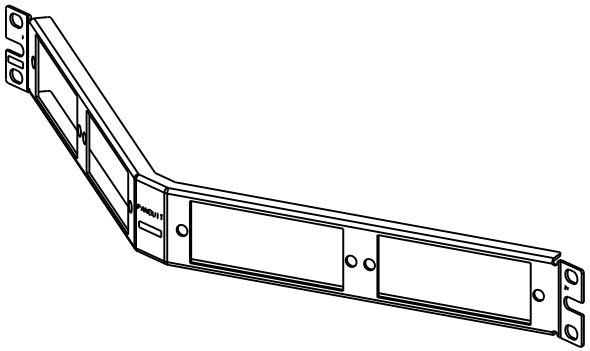

REV	DATE	BY	CHK	DESCRIPTION	ECN - R	CUST	SUP	OTH
R	8/19/08	LEHO		RELEASE TO PRODUCTION	F00041BA_DC			

DRAWING FILENAME: F00041BA_DC/01A.PRT
MODEL FILENAME: F00041BA/01A
SIZE: A

1RU ANGLED PATCH PANEL FRAME CUSTOMER DRAWING

PANDUIT™ CORP.
TINLEY PARK, ILL 60477

THIRD ANGLE PROJECTION

ALL DIMENSIONS ARE GIVEN IN INCHES, UNLESS OTHERWISE SPECIFIED.
DIMENSIONAL TOLERANCES ARE:
(.X) ±.03 (.XXX) ±.005
(.XX) ±.01 ANGLES ± 1°

DRAWN BY: LEHO
DATE: 8/19/08
CHK'D:
REVIEW DRAWING NUMBERS:
MAT'L: SEE NOTES
I.I. NUMBER:
PROD SPEC/PKG SPEC:
ASSY METHOD/TEST METHOD:
SCALE: 1:4
PART NO.: CFAPPBL1A
DRAWING NO.: F00041BA_DC