THIS DRAWING IS UNPUBLISHED. RELEASED FOR PUBLICATION 1997
© COPYRIGHT 1997 BY - ALL RIGHTS RESERVED.

PN 1-7 & 2-7

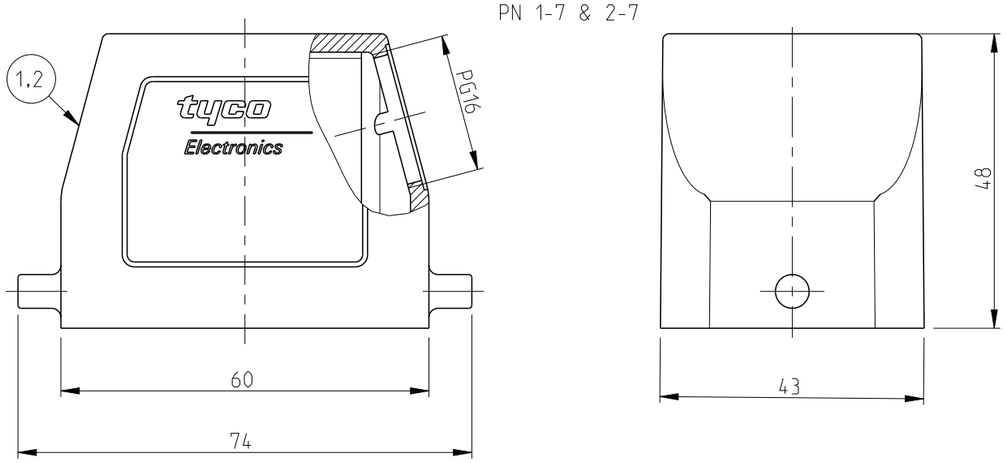

PN 1-3 & 2-3

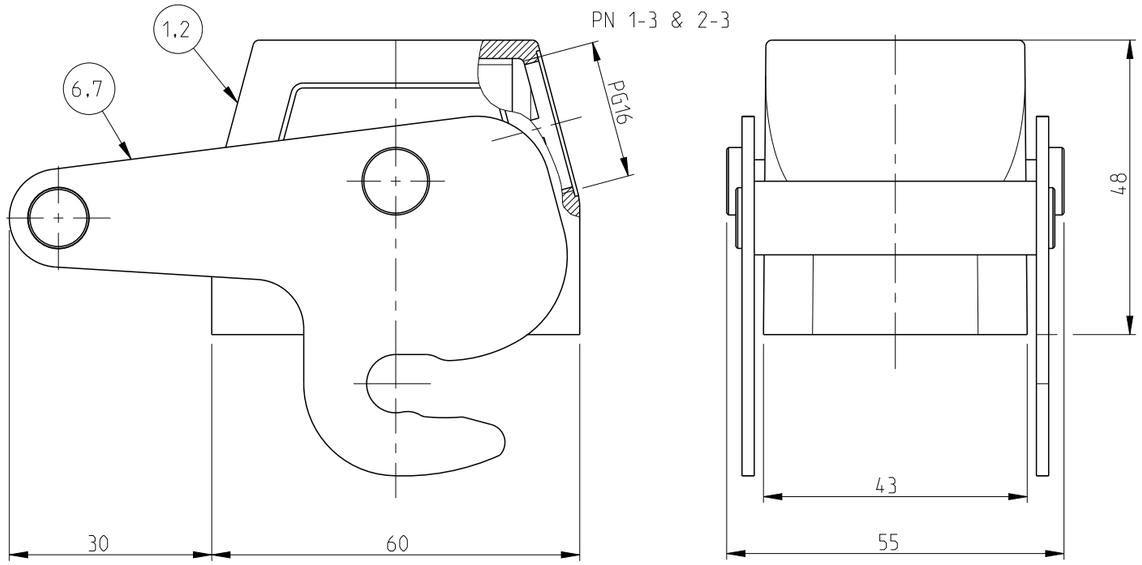

PN 0-2

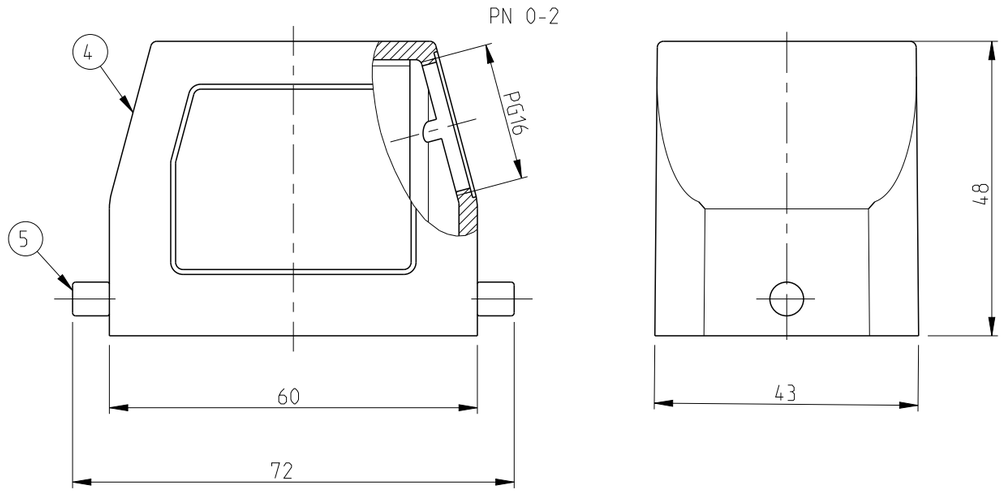

REVISIONS

P	LTR	DESCRIPTION	DATE	DWN	APVD
	A6	Released as per ECR-08-005944	06.Mar.2008	SP	TS
	A7	ECR-16-015318	16AUG2017	GR	MKO

Notes

1 Material: Housing: Aluminium diecasting alloy

2 Surface:- Varnish-grey/White
-Aluminium oxide+Varnish black

3 Varnish on the inside not necessary

4 Packaging
Packaging quantity: 5 pieces in a box

PN 1-7 & 2-7

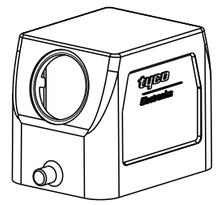

SCALE 1:2

PN 1-3 & 2-3

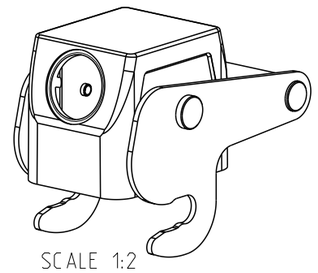

SCALE 1:2

PN 0-2

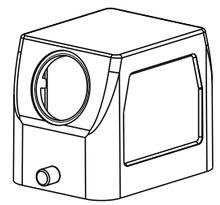

SCALE 1:2

0-2	0-1	2-3	1-3	2-7	1-7	DESCRIPTION	MATERIAL	SURFACE	COLOR	ITEM NO	NOTES
OBSOLETE	OBSOLETE										
-	1	1	-	-	-	Central clip-ZB	Stainlees steel	Blank	-	7	
-	-	-	1	-	-	Central clip-ZB	Steel	Zinc plated	Blue	6	
2	-	-	-	-	-	LB-Clip bolt	Stainlees steel	Blank	-	5	
1	-	-	-	-	-	Hood HB	Aluminium	-	White	4	Without bolt
-	1	-	-	-	-	Hood HB	Aluminium	-	Grey	3	Also 2xM3 for Identification plate
-	-	1	-	1	-	Hood HB-K	Aluminium	Aluminium oxide	Black	2	
-	-	-	1	-	1	Hood HB	Aluminium	-	Grey	1	

ORDERING TEXT

HB.6.STS.1.16.G
HB-K.6.STS.1.16.G
HB-Z.6.STS-ZB.1.16.G
HB-K/Z.6.STS-ZB.1.16.G
~~HB.6.STS.1.16.G.S0~~
~~HB.6.STS.1.16.G~~

THIS DRAWING IS A CONTROLLED DOCUMENT.

DIMENSIONS: mm

TOLERANCES UNLESS OTHERWISE SPECIFIED:
n.ISO 8015:
n.ISO 2768-mH-E:
n.DIN 16901-120
0 PLC ±
1 PLC ±
2 PLC ±
3 PLC ±
4 PLC ±
ANGLES ±

MATERIAL: material_2

FINISH: finish_spec_2

DWN Schneider 25.05.1999
CHK Schweiger 25.05.1999
APVD
PRODUCT SPEC 108-74001/74003
APPLICATION SPEC 114-74001/74004/74005
WEIGHT

TE Connectivity

NAME Hood HB.6.STS.1.16.G

SIZE	CAGE CODE	DRAWING NO	RESTRICTED TO
A3	00779	C-1102240	-

CUSTOMER DRAWING | SCALE 1:1 | SHEET 1 OF 1 | REV A7