REV.	DATE	DESCRIPTION
NC	02/02/05	INITIAL RELEASE

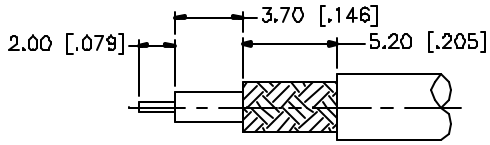

RECOMMENDED CABLE STRIPPING DIMENSIONS

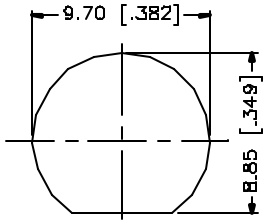

RECOMMENDED MOUNTING HOLE

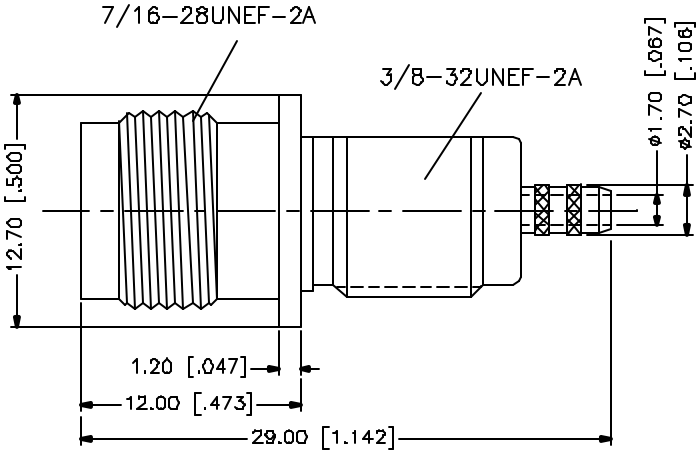

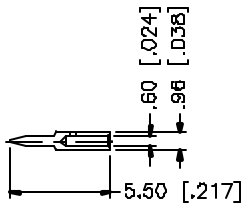

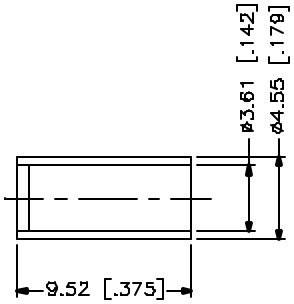

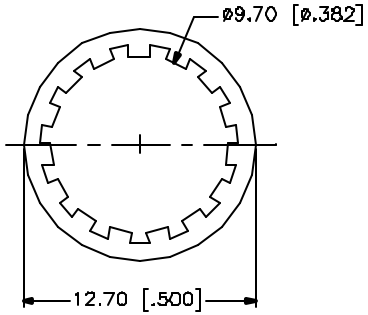

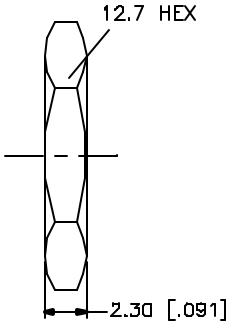

CRIMP NOTES:

1. CRIMPED CONTACT PIN HEX CRIMP SIZE .151"
2. CONTACT PIN TO SOLDER
3. MAX. PANEL THICKNESS = 7mm

	DESCRIPTION	MATERIAL	FINISH	QTY
8				
7				
6	HEX NUT	BRASS	NICKEL	1
5	LOCK WASHER	BRASS	NICKEL	1
4	FERRULE	COPPER	NICKEL	1
3	CONTACT PIN	PHOS. BRONZE	GOLD	1
2	INSULATOR	TEFLON	NATURAL	1
1	BODY	BRASS	NICKEL	1

UNLESS OTHERWISE SPECIFIED DIMENSIONS ARE IN MILLIMETERS. DIMENSIONS IN [ ] ARE IN INCHES AND FOR CUSTOMER REFERENCE ONLY.

UNLESS OTHERWISE SPECIFIED TOLERANCES FOR MILLIMETERS ARE:
0.5 – 6mm ± 0.20mm
6 – 30mm ± 0.40mm
30 – 120mm ± 0.50mm

UNLESS OTHERWISE SPECIFIED TOLERANCES FOR INCHES ARE:
.020 – .315 = ± 0.007"
.315 – 1.180 = ± 0.015"
1.180 – 4.724 = ± 0.020"

DO NOT SCALE DRAWING

APPROVALS		DATE
DRAWN	G.R.S.	02/02/05
CHECKED		
ISSUED		
SHEET	1 OF 1	
CAD FILE	C:/122/122501.DWG	

Amphenol Connex

PART DESCRIPTION: TNC BULKHEAD CRIMP JACK FRONT MOUNT (FOR RG-316U/D CABLE)

PART NO. 122501

DWG. NO. 122501.DWG | REV. NC | SIZE A | SCALE NA