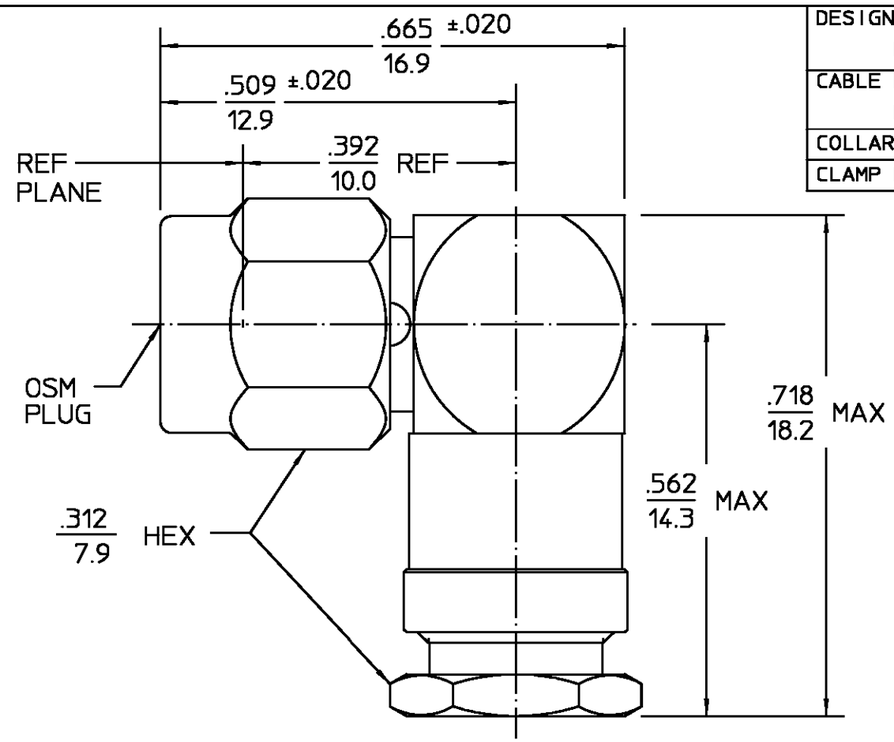

DESIGNED FOR USE WITH RG-188/U	
CABLE ENTRY DIAMETER MINIMUM	
COLLAR	.066
CLAMP NUT	.112

REVISIONS

REV	DESCRIPTION	DATE	APPROVED
01 3	REVISED	DAC 6/15/99	DCpm 6/16/99

ELECTRICAL	MECHANICAL	ENVIRONMENTAL
Nominal Impedance (Ohms) 50	Interface Dimensions MIL-STD-348A, Fig. 310.1	Temperature Rating -60°C to +165°C
Frequency Range (GHz) DC to 12.4	Recommended Mating Torque 7 - 10 in- lbs	Vibration MIL-STD-202, Method 204, Condition D.
Volt Rating (VRMS MAX) @ Sea Level 250	Mating Characteristics: Insertion (MAX Lbs) N/A	Shock MIL-STD-202, Method 213, Condition I.
VSWR 1.15 + .01	Withdrawal (MIN Oz) N/A	Thermal Shock MIL-STD-202, Method 107, Condition B, Except High Temp shall be +85°C
Insertion Loss (dB MAX) $.08\sqrt{f(GHz)}$	Force to Engage and Disengage (In-Lbs MAX) 2.0	Moisture Resistance MIL-STD-202, Method 106
RF Leakage (dB MIN) -[60-f(GHz)]	Center Contact Captivation Axial (Lbs) 6.0	Corrosion - MIL-STD-202, Method 101, Condition B, 5% salt spray
Corona, 70,000 Ft (VRMS MIN) 190	Radial (In-Oz) 4.0	
Dielectric Withstanding Voltage (VRMS MIN) @ Sea Level 750	Cable Retention Axial Force (Lbs) 30	.XXX = in
Contact Resistance (Milliohms MAX) Center Contact 2.0	Torque (In-Oz) N/A	XX.X = mm
Outer Contact 2.0	Weight (Grams) TBD	
Cable to Housing 0.5		
RF High Potential @ Sea Level (VRMS MIN @ 5 MHz) 500		
I.R.(Megohms MIN) 10,000		

COMPONENT	MATERIAL	FINISH
HOUSING COUPLING NUT CLAMP NUT CAP	STAINLESS STEEL PER ASTM-A484 AND ASTM-A582, TYPE 303	GOLD PLATE PER MIL-G-45204
CENTER CONTACT COLLAR	BRASS PER ASTM-B-16 HALF HARD	GOLD PLATE PER MIL-G-45204
DIELECTRIC	TFE FLUOROCARBON PER ASTM-D-1457	N/A
RETAINING RING	BERYLLIUM COPPER PER ASTM B 194, ALLOY C17200, CONDITION H	N/A
GASKET	SILICONE RUBBER PER ZZ-R-765	N/A

UNLESS OTHERWISE SPECIFIED DIMENSIONS ARE IN INCHES
TOLERANCE ON
FRAC. ± 1/64 DEC. ±.005 ANGLES ± 1°

DRAWN BY BWC DATE 6-05-67
CHECKED BY
APP'D BY D. NANIA 8/31/67

AMP

AMP Incorporated
140 Fourth Avenue
Waltham, MA 02451-7599

These drawings and specifications are the property of AMP Incorporated and shall not be reproduced or copied or used in whole or in part as the basis for the manufacture or sale of item(s) without written permission.

USE ASS'Y PROCEDURE

408-04965
NO. A(20-077)

TITLE OSM RIGHT ANGLE CABLE PLUG CLAMP ATTACHMENT

SIZE	CODE IDENT NO.		REV
B	26805	2007-7188-00	01 3

SCALE 5 : 1 SHEET 1 OF 1

CUSTOMER DRAWING

AMP PART # 1051139-1
SHEET 1 OF 1 REV A