Jul.1.2019 Copyright 2019 HIROSE ELECTRIC CO., LTD. All Rights Reserved.
In case of consideration for using Automotive equipment / device which demand high reliability, kindly contact our sales window correspondents.

	COUNT	DESCRIPTION OF REVISIONS	BY	CHKD	DATE		COUNT	DESCRIPTION OF REVISIONS	BY	CHKD	DATE
△					. .	△					. .
△					. .	△					. .
△					. .	△					. .

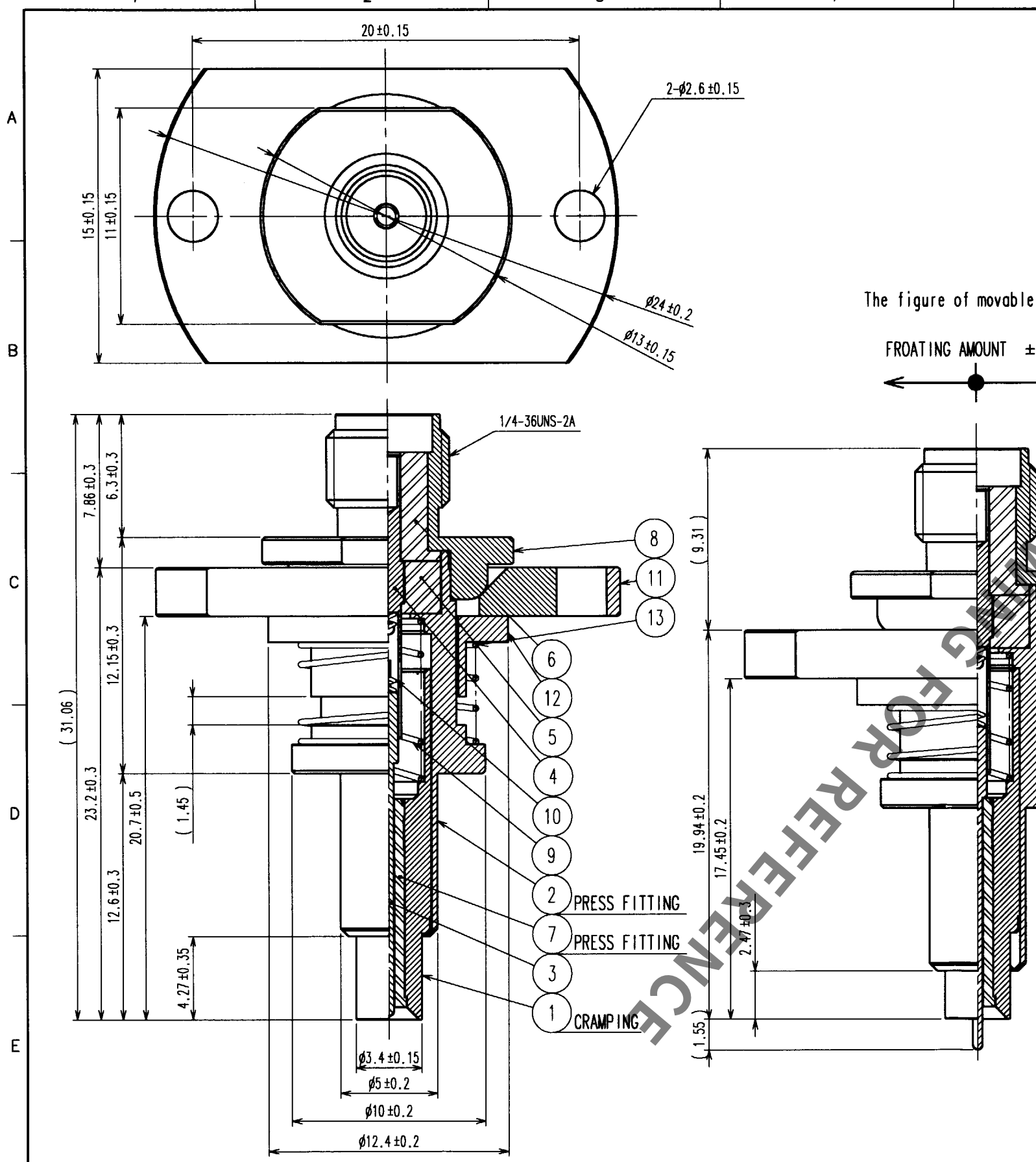

2> FIGURE 2 (2 : 1)

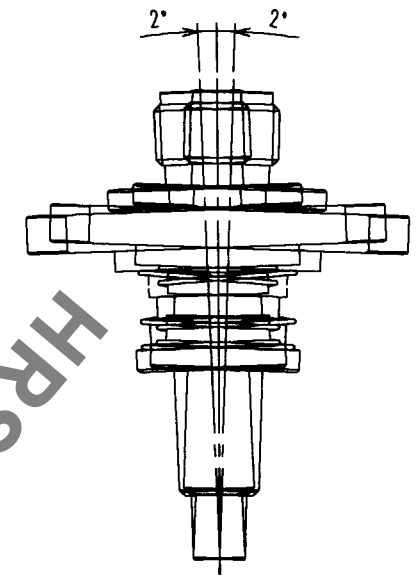

1> FIGURE 1 (2 : 1)

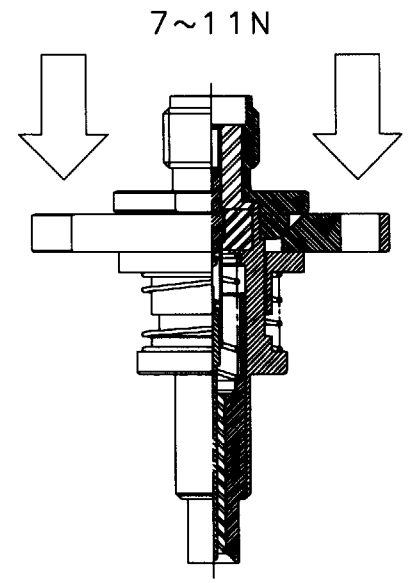

The figure of movable state

FROATING AMOUNT ±1.2mm

DISTANCE L

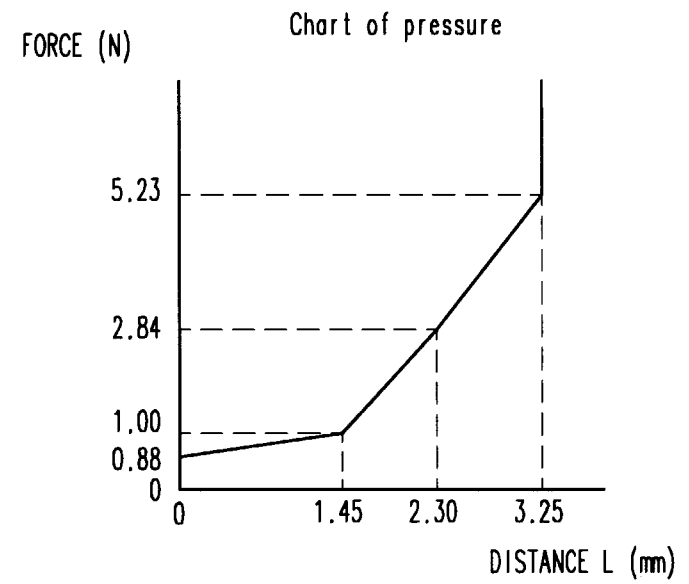

HRS DRAWING FOR REFERENCE

NO.	MATERIAL	FINISH, REMARKS	NO.	MATERIAL	FINISH, REMARKS
7	PTFE				
6	PTFE		13	STAINLESS STEEL	
5	PTFE		12	PHOSPHOR BRONZE	NICKEL PLATING
4	BELYLLIUM COPPER	GOLD PLATING	11	STAINLESS STEEL	PASSIVATE
3	BELYLLIUM COPPER	GOLD PLATING	10	STAINLESS STEEL	GOLD PLATING
2	PHOSPHOR BRONZE	GOLD PLATING	9	STAINLESS STEEL	GOLD PLATING
1	PHOSPHOR BRONZE	GOLD PLATING	8	STAINLESS STEEL	PASSIVATE

NOTE 1> Using this product, forced on MS-156 by 7~11N.(Refer to fig.1)
2> Mating angle which is less than 2 degree is acceptable.(Refer to fig.2)

CODE NO.(OLD)	DRAWN	DESIGNED	CHECKED	APPROVED	RELEASED
	D.Jomahori 03·6·30	D.Jomahori 03·6·30	R.Kano 03·6·30	K.Kawamura 03·6·30	. .

SCALE 4 : 1	DRAWING NO. EDC3-180308	PART NO. MS-156-HRMJ-9
UNITS mm	HRS HIROSE ELECTRIC CO., LTD	CODE NO. CL358-0180-6 1/1

TO
RFD

FORM NO.229 (R-1)