Alle Rechte vorbehalten/ *All rights reserved*

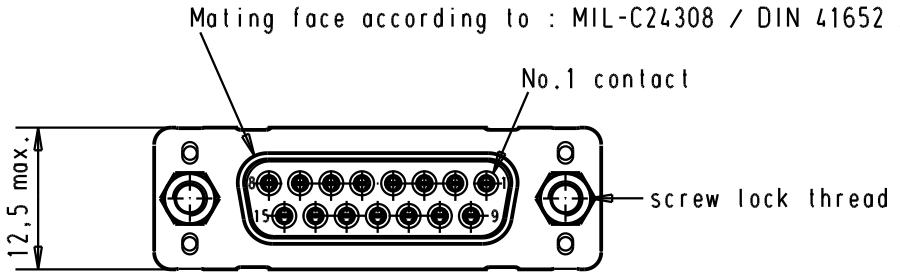

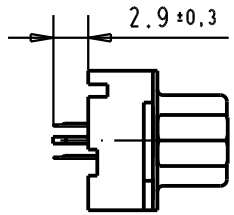

Printed board layout
component side
PTH's plating = tin lead

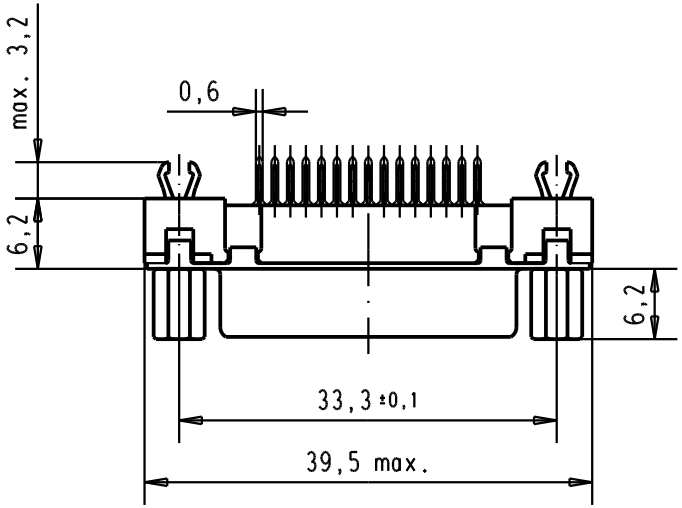

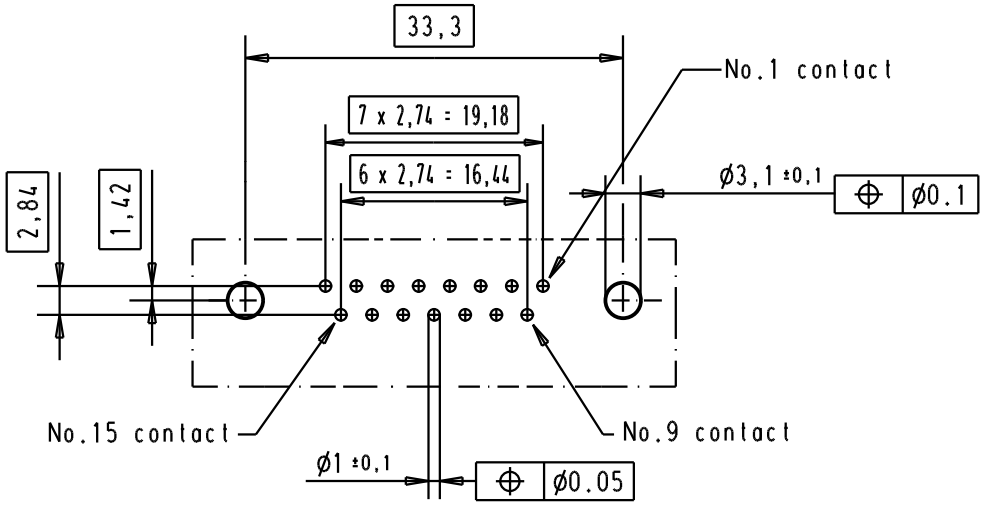

Connector retention and insertion forces on the PCB = 25 / 80 newtons

Part number	Screw lock thread	Performance level	Mod.	Dat.	Name
09 66 251 3533	M3	1			
09 66 251 6533	M3	2			
09 66 251 7533	M3	3			
09 66 251 3513	4-40 UNC	1			
09 66 251 6513	4-40 UNC	2	31892	05/05/04	JH
09 66 251 7513	4-40 UNC	3	29746	07-FEB-02	JB

	Dat.	Name
Detail.	07-FEB-02	JB
Insp.		
Stand.		

All Dim. in mm
Orig. Size DIN A 4

D-sub, 15 poles,
female, straight,
with solder pins 2.9, screw lock
and grounding board lock.

Maßstab/ *Scale* 1,5:1

HARTING EURL
F-95972 Paris

TB 09 66 251 x5x3

Sub.

Blatt/ *Page* 1