DO NOT SCALE
DIMENSIONS IN mm

METRIC

THIRD ANGLE PROJECTION

P.C.B. HOLE DIM. ACTION PIN				
DRILLED HOLE	1,15	±0,025		mm
FIN. HOLE	0,94	to	1,09	mm
AFTER REFLOW	0,91	to	1,09	mm
Cu-thks	0,025	to	0,075	mm
SnPb-thks	0,004	to	0,010	mm

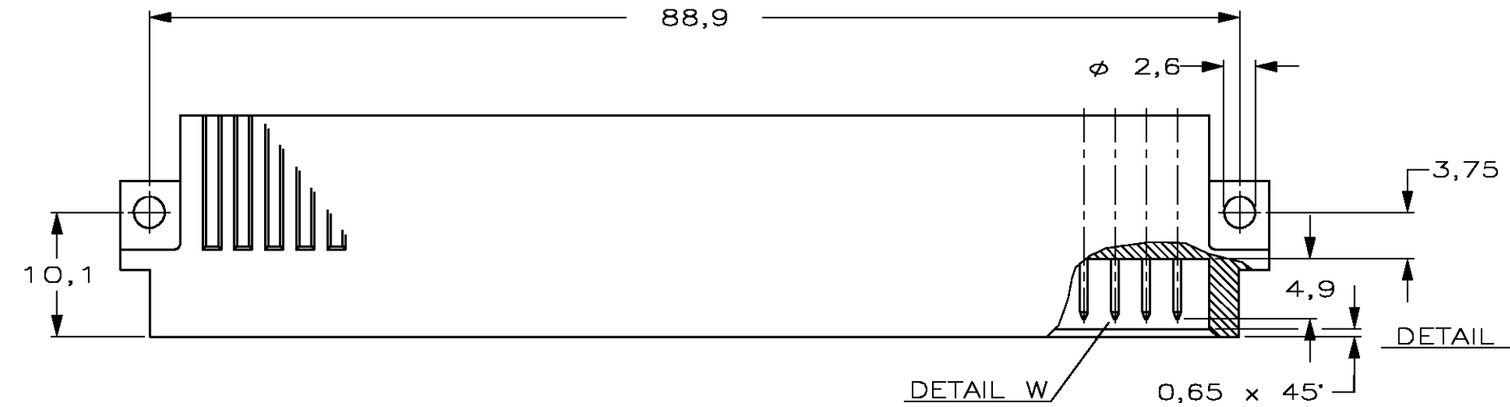

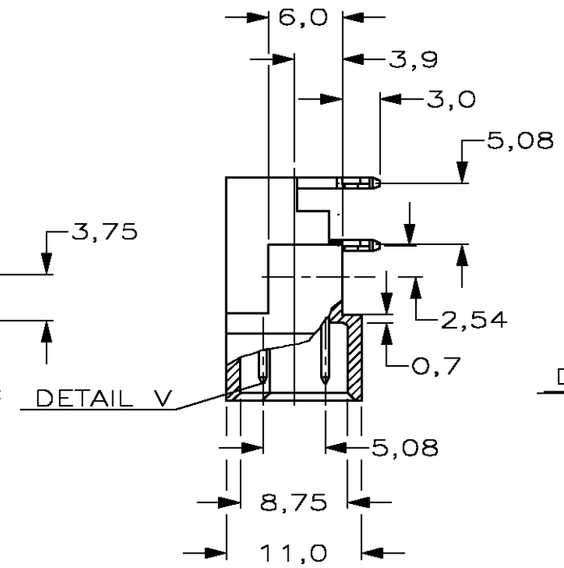

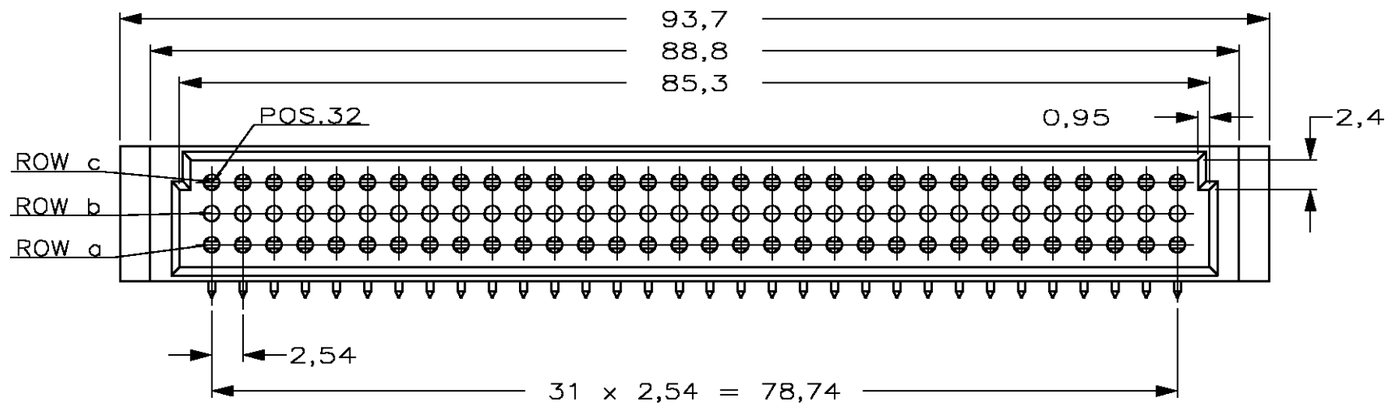

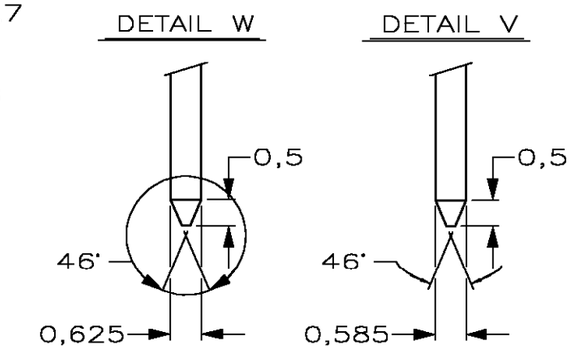

| ROW | | | |